WOOD TECHNIQUE
Elevating Plywood

GUILD ◆ EDITION

IN THE SHOP
BREADBOARD ENDS

Woodsmith®

Woodsmith.com

Vol. 47 / No. 278

TRESTLE TABLE
& BENCHES

Projects Inside:

- Modern Floor Mirror
- 2 Versatile Table Saw Sleds
- Whimsical Automaton
- 3 Tabletop Clocks

EVERYTHING
for the Woodworker

grizzly.com®

800-523-4777 #GRIZZLYTOOLS

affirm Monthly Payments | clicklease Business to Business Equipment Financing

FINANCING AVAILABLE

Please visit grizzly.com for up-to-date pricing.

Due to rapidly changing market conditions, our advertised prices may be changed at any time without prior notice.

WARNING! †[1]: Cancer & Reproductive Harm

Some products we sell can expose you to chemicals known to the State of California to cause cancer and/or birth defects or other reproductive harm. For more information go to www.P65Warnings.ca.gov

23474

Purveyors of Fine Machinery® Since 1983

Grizzly® Industrial

Quality Machines, Buy Direct & Save

FREE CATALOG!

Request yours at grizzly.com/forms/catalog-request

640 PAGES

2 HP Two-Stage Cyclone Dust Collector

NEW!

Advanced MERV-17 HEPA Filtration

- 77 Decibles
- 0.3-Micron two-stage HEPA filtration
- Automatic filter cleaner
- Bag full indicator
- Quick-release collection drum
- 35-Gallon capacity
- Wireless remote control
- Footprint: 48" x 23½"
- Shipping weight: ≈ 485 lbs.

MADE IN AN ISO 9001 FACTORY

G0976 ONLY $2950 — $299 FREIGHT

6" x 60" Jointer

NEW!

A smooth-cutting V-helical cutterhead

- 24-indexable-carbide insert V-helical cutterhead
- Handwheel-adjustable tables
- Rabbeting outfeed table
- Precision gib adjustment on dovetailed ways
- Built-in mobile base
- Footprint: 15½" x 18"
- Shipping weight: ≈ 307 lbs.

G0526 ONLY $1495 — $255 FREIGHT

14" 1¾ HP Bandsaw

NEW!

High-performance machine

- 13½" Left-cutting capacity
- 12" Resaw capacity
- Blade speeds: 1690, 2950 FPM
- Oversized cast-iron table
- Table tilt: 5° Left, 45° right
- Footprint: 16" x 18"
- Shipping weight: ≈ 334 lbs.

MADE IN AN ISO 9001 FACTORY

G0555XH ONLY $1585 — $255 FREIGHT

10" 3 HP 240V Cabinet Table Saw

The centerpiece of your shop

- 32" Rip capacity
- Accepts dado blades up to 13/16"
- 40" x 27" Precision-ground cast-iron table
- Shop Fox Classic table saw fence
- All machined cast-iron internal structure
- Footprint: 20½" x 20½"
- Shipping weight: ≈ 508 lbs.

MADE IN AN ISO 9001 FACTORY

G1023RL ONLY $2295 — $349 FREIGHT

10" 3 HP 220V Table Saw

SOUTH BEND® SINCE 1906

Top-of-the-line 3 HP table saw

- 52" Rip capacity
- Blade height, blade angle, & fence-to-blade digital readouts
- Right and rear extension tables
- Built-in storage shelves
- Precision-ground cast-iron table with beveled edge
- Footprint: 24" x 22"
- Shipping weight: ≈ 742 lbs.

MADE IN AN ISO 9001 FACTORY

SB1111 ONLY $3025 — $349 FREIGHT

18" Variable-Speed Scroll Saw

Award-winning scroll saw

- Tilting table with easy-to-read bevel scale
- Variable blade speed, 450-1500 SPM
- Cam-action blade release for quick tool-free blade changes
- Adjustable gooseneck LED work light
- Flexible sawdust blower
- Footprint: 35" x 24"
- Shipping weight: ≈ 53 lbs.

MADE IN AN ISO 9001 FACTORY

G0938 ONLY $355 — $59.95 SHIPPING

14" Floor Drill Press with Laser Guide

Increase efficiency with unique features

- 12-Speed spindle, 340 to 2860 RPM
- LED light increases visibility for drilling precision
- Push-button spindle depth stop for repeatable drilling
- Crank handle-operated rack-and-pinion vertical table
- Cast-iron table with four T-slots
- Footprint: 18" x 10½"
- Shipping weight: ≈ 133 lbs.

MADE IN AN ISO 9001 FACTORY

T33902 ONLY $565 — $199 FREIGHT

16" x 24" Variable-Speed Wood Lathe

Large turning capacities

- VFD runs 3-phase motor for electronic variable-speed control
- Digital spindle speed indicator
- Adaptable headstock positioning
- Lever-action cam locks
- Belt drive with two speed ranges
- Footprint: 42½" x 16"
- Shipping weight: ≈ 388 lbs.

MADE IN AN ISO 9001 FACTORY

G0838 ONLY $1895 — $255 FREIGHT

15" 3 HP Planer

Award-winning and clean-cutting planer

- 74-indexable-carbide insert spiral cutterhead
- 42" Cast-iron table
- Two-speed automatic board feed
- Built-in mobile base
- Top-mounted return rollers
- Footprint: 47¼" x 28½"
- Shipping weight: ≈ 672 lbs.

G0453Z ONLY $2595 — $349 FREIGHT

Woodsmith®

AN ACTIVE INTEREST MEDIA PUBLICATION

EXECUTIVE EDITOR Phil Huber
SENIOR EDITOR Erich Lage
ASSISTANT EDITOR Rob Petrie

EXECUTIVE ART DIRECTOR Todd Lambirth
SENIOR ILLUSTRATOR Dirk Ver Steeg
SENIOR GRAPHIC DESIGNERS Bob Zimmerman, Becky Kralicek
CONTRIBUTING ILLUSTRATOR Erich Lage

CREATIVE DIRECTOR Chris Fitch
PROJECT DESIGN EDITOR Dillon Baker
PROJECT DESIGNER/BUILDER John Doyle
CAD SPECIALIST/BUILDER Steve Johnson
SHOP MANAGER Marc Hopkins
CONTRIBUTING PHOTOGRAPHER Chris Hennessey

ADVERTISING DIRECTOR Jack Christiansen
847-724-5633
jchristiansen@aimmedia.com
AD PRODUCTION COORDINATOR Julie Dillon
GRAPHIC DESIGNERS Julie Green, Anna Otto

HOME GROUP
ACTIVE INTEREST MEDIA

SENIOR VICE PRESIDENT, CONTENT Rob Yagid

ACTIVE INTEREST MEDIA

CHAIRMAN & CEO Andrew W. Clurman
CHAIRMAN EMERITUS Efrem Zimbalist III
CHIEF OPERATING OFFICER Brian Van Heuverswyn
CHIEF FINANCIAL OFFICER Adam Smith
SENIOR VICE PRESIDENT, MARKETING Erica Moynihan
VICE PRESIDENT, MARKETING Amanda Phillips
VICE PRESIDENT, CIRCULATION Paige Nordmeyer
VICE PRESIDENT, SALES OPERATIONS Christine Nilsen
VICE PRESIDENT, EVENTS Julie Zub
VICE PRESIDENT, DIGITAL PRODUCT DEVELOPMENT Ashley MacDonald
VICE PRESIDENT, STRATEGY & RESEARCH Kristina Swindell
DIRECTOR, HUMAN RESOURCES Scott Roeder
DIRECTOR, PRODUCTION Phil Graham
DIRECTOR, RETAIL SALES Susan A. Rose
DIRECTOR, INFORMATION TECHNOLOGY Andrew Shattuck

Woodsmith® (USPS 465-410) (ISSN 0164-4114) is published bimonthly by the Home Group of Active Interest Media Holdco, Inc. The known office of publication is located at 2143 Grand Ave, Des Moines, IA 50312. Periodicals Postage Paid at Des Moines, IA, and additional mailing offices. Postmaster: Send address changes to Woodsmith, Box 37274, Boone, IA 50037-0274. Postmaster: Send all UAA to CFS. (See DMM 507.1.5.2); NON-POSTAL AND MILITARY FACILITIES: Woodsmith, Circulation Department, PO Box 37217, Boone, IA 50037" Printed in U.S.A.

Woodsmith® is a registered trademark of Active Interest Media Holdco, Inc.
Copyright© 2025 Active Interest Media Holdco, Inc. All rights reserved.
Subscriptions: $29/year, Single copy: $7.99
Canadian Subscriptions: Canada Post Agreement No. 40038201. Send change of address information to PO Box 881, Station Main, Markham, ON L3P 8M6.
Canada BN 82564 2911

WoodsmithCustomerService.com

ONLINE SUBSCRIBER SERVICES

- **VIEW** your account information
- **PAY** your bill
- **RENEW** your subscription
- **CHANGE** your mailing or e-mail address

CUSTOMER SERVICE Phone: **800-333-5075** weekdays

SUBSCRIPTIONS
Customer Service
2143 Grand Avenue
Des Moines, IA 50312
subscriptions@aimmedia.com

EDITORIAL
Woodsmith Magazine
2143 Grand Avenue
Des Moines, IA 50312
woodsmith@woodsmith.com

from the editor

Sawdust

Thank you to all who wrote in with project ideas. I appreciated the compliments about how projects in Woodsmith have helped you become a better woodworker and inspired you to build along with us.

I'm working to bring more woodworkers to this fun hobby. Part of that is offering a wide range of projects and styles. In this issue, we're offering something a little out of the ordinary. Chris Fitch has long made "kinetic sculptures" — think weathervanes and whirligigs (remember the fish from issue 213?). He's back with a two-part automaton on page 28. In this first part, Erich and Becky present the base and the drivetrain. Next issue, we'll show you the carving. This project has been a hit with everyone who sees it.

England Tour. Later this year, I'm leading a woodworking field trip to England. The trip runs September 8th-15th. My co-host is Mike Peckovich, the editor and creative director over at Fine Woodworking. We'll be touring a few woodworking museums, schools, historic homes, and visiting a tool maker. Whenever I'm watching a movie or show on television, I'm on the lookout for interesting furniture and woodworking in the background. The sites we'll visit offer the chance to look at the projects up close, without being distracted by the plot. Check out all the details using your phone's camera and the QR code at right. Or go to: https://store.woodsmith.com/pages/tour/woodworkingtravel-2025sep-england

Woodworking In America. Last fall, we held a live event here in Des Moines: *Woodworking In America*. Since it was such a hit, we're doing it again. Save a place on your calendar for October 10 &11. We're gathering a lineup of presenters. We've even booked a larger space … so we can all fit.

Come Visit. While it's winter when I write this, it'll be Spring-ish when you read it. Which brings us to traveling season. Whether it's spring break or a summer road trip, if you're near Des Moines, IA, I invite you to stop in for a tour and a hello. There are several Woodsmithers in the office and shop every weekday. We're happy to show you around the shop, photo and video studio. You'll see recent and upcoming projects and get a behind-the-scenes look at how we make magazines and videos. Individual and group tours are welcome. All I ask is that you give us a heads up on when to expect you and how many are in your group. Call the number in the margin or send me an email: phuber@aimmedia.com

contents

No. 278 • April/May 2025

Projects

craft project
Automaton, part 1 28
This project invites a close look and audience participation. Part one makes the drivetrain and the base.

heirloom project
Trestle Table & Benches 34
Classic construction techniques and a timeless look ensure that this table gathers friends, families, and memories.

shop project
Table Saw Sleds 42
Build a pair of versatile sleds to upgrade the accuracy, safety, and performance of your table saw.

designer project
Modern Floor Mirror. 48
Take that magic mirror off the wall and turn it into a dressing station that's the fairest of them all.

weekend project
3 Tabletop Clocks 54
Here's a timely trio of projects that use up those precious pieces you've been keeping for a special occasion.

Departments

from our readers
Tips & Techniques 6

all about
Epoxy Inlays pt. 2 12

woodworking technique
Elevating Plywood 18

great gear
New Push block, Sandpaper & Casters . . 22

in the shop
Breadboard Ends. 64

Sources 66

Router Track Guide

When putting together something like a case, grooves and dadoes are often the meat and potatoes of the joinery. And, on large panels like the one you see above, I find the best way to cut them is with my router. A straightedge is an easy way to guide the cuts, but a more reliable method is to use the track from a track saw.

The plywood guide you see below screws onto the router base, and the series of grooves shown in detail 'a' allow it to slide along just like the track saw would. The big advantage here is that the track sets up square cuts much quicker than a straightedge, making case joinery a breeze to rout.

Marc Hopkins
Des Moines, Iowa

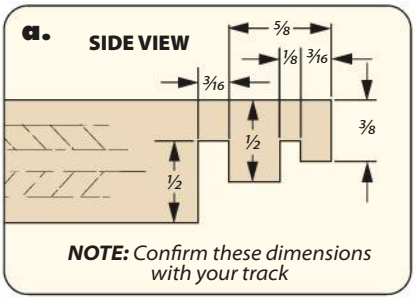

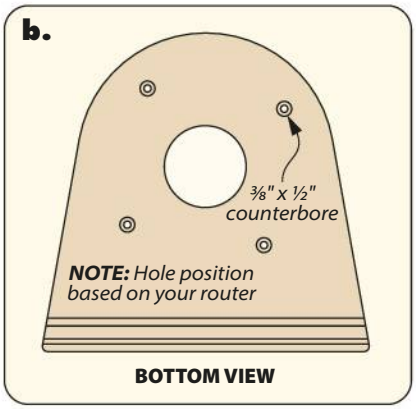

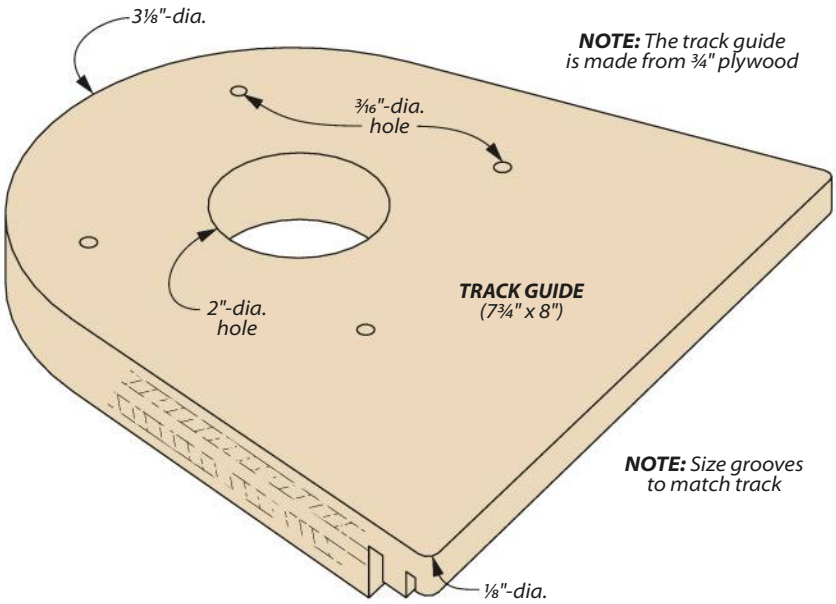

Compiled by: Rob Petrie; Built by: John Doyle

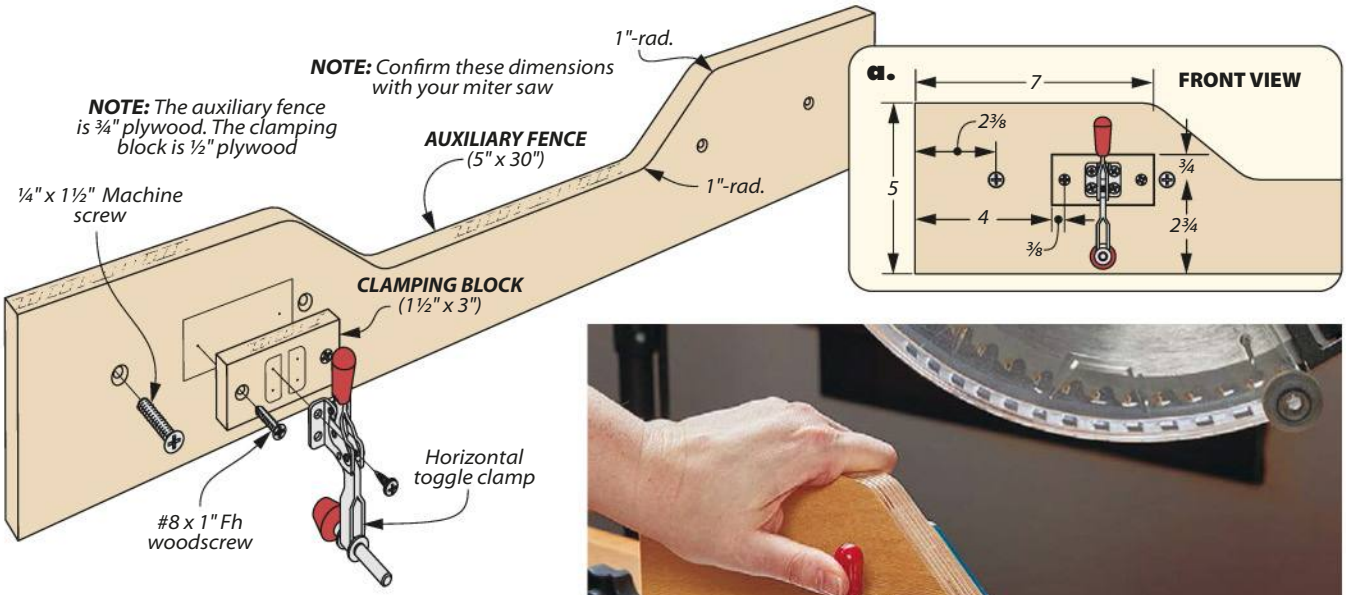

Toggling Miter Fence

When cutting miters on small pieces (like trim) it can be difficult to get a good hold without the part moving slightly — resulting in an imperfect cut. To fix this, I put together the fence you see here, with a simple toggle clamp attached to hold the workpiece.

Dan Martin
Galena, Ohio

1348 DrillMatePRO™
Professional Quality Drill Press

MILESCRAFT
ALWAYS THE BETTER IDEA

- 1/2" keyed chuck for larger bits
- Infinite angle adjustments from 0° to 60°
- Self-centering base
- 1349 DrillFence available for quick, repeatable drilling

SCAN, LEARN, BUILD.

FOLLOW US ON SOCIAL

Illustrations: Becky Kralicek

Arc-Striking Bow

Laying out curves presents a unique challenge. Small curves are easy with a compass, and a trammel works well for medium-sized ones, but for long arcs I use the "bow" you see above. A long, thin piece of wood serves as the body. A length of cord feeds through holes at either end, pulling the bow to the desired arc. I also added a cord lock, which was just a small piece with two holes drilled in it (left photo). This holds the cord, maintaining the arc while I scribe it.

Phil Huber
Urbandale, Iowa

QUICK TIPS

Chap-Free Glue. *Max Doyle, Hazelton, IA* came up with an easy way to keep the lids from sticking on his bottles of CA glue. A little wax (or in this case lip balm) on the threads will keep any excess glue from sealing the bottle.

SUBMIT A TIP TO WIN

GO ONLINE

If you have an original shop tip, we would like to hear from you and will consider publishing your tip in one or more of our publications. So jump online and go to:

SubmitWoodsmithTips.com

You'll be able to tell us all about your tip and upload your photos and drawings. You can also mail your tips to "Woodsmith Tips" at the editorial address shown on page 2. We will pay up to $200 if we publish your tip.

A magnet inset in the block will hold the square in its groove while you focus on the bit. ▶

Precision Bit Height

If you have a double square, then there's a simple and reliable way to set the height of your bit at the router table. It begins with a hardwood block and a magnet. I drilled a hole on the edge of the block, then cut a groove along that edge to fit the ruler of the square. After gluing the magnet in the hole, you'll have a holder to turn a square into a setup gauge.

From there, set the square to the desired height. You can then place the square and block beside the bit and adjust as needed. The block keeps the square parallel to the table so you can be sure that your bit will be at the precise height you're aiming for.

Jeffrey Fiore
West Chester, Pennsylvania

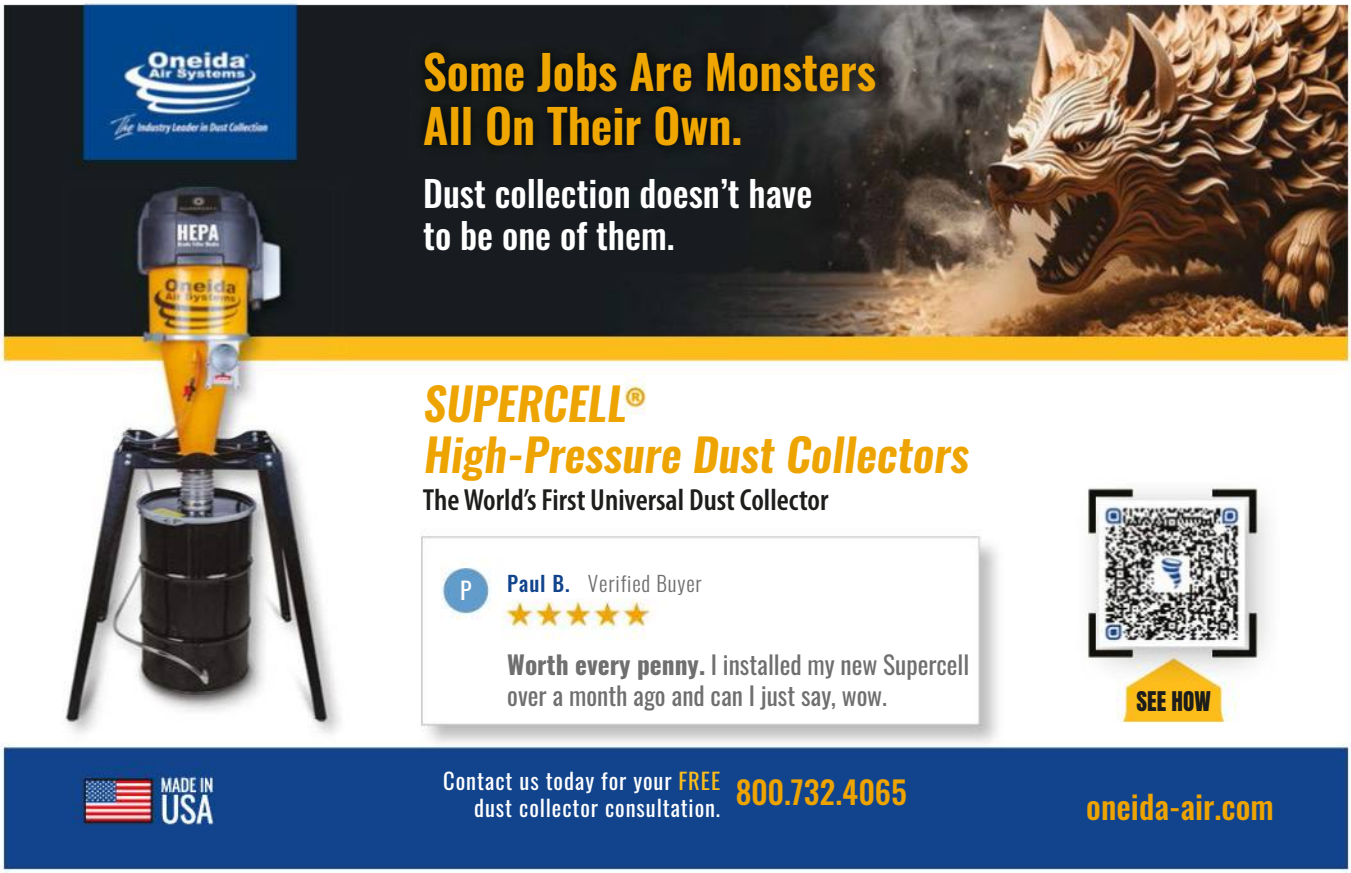

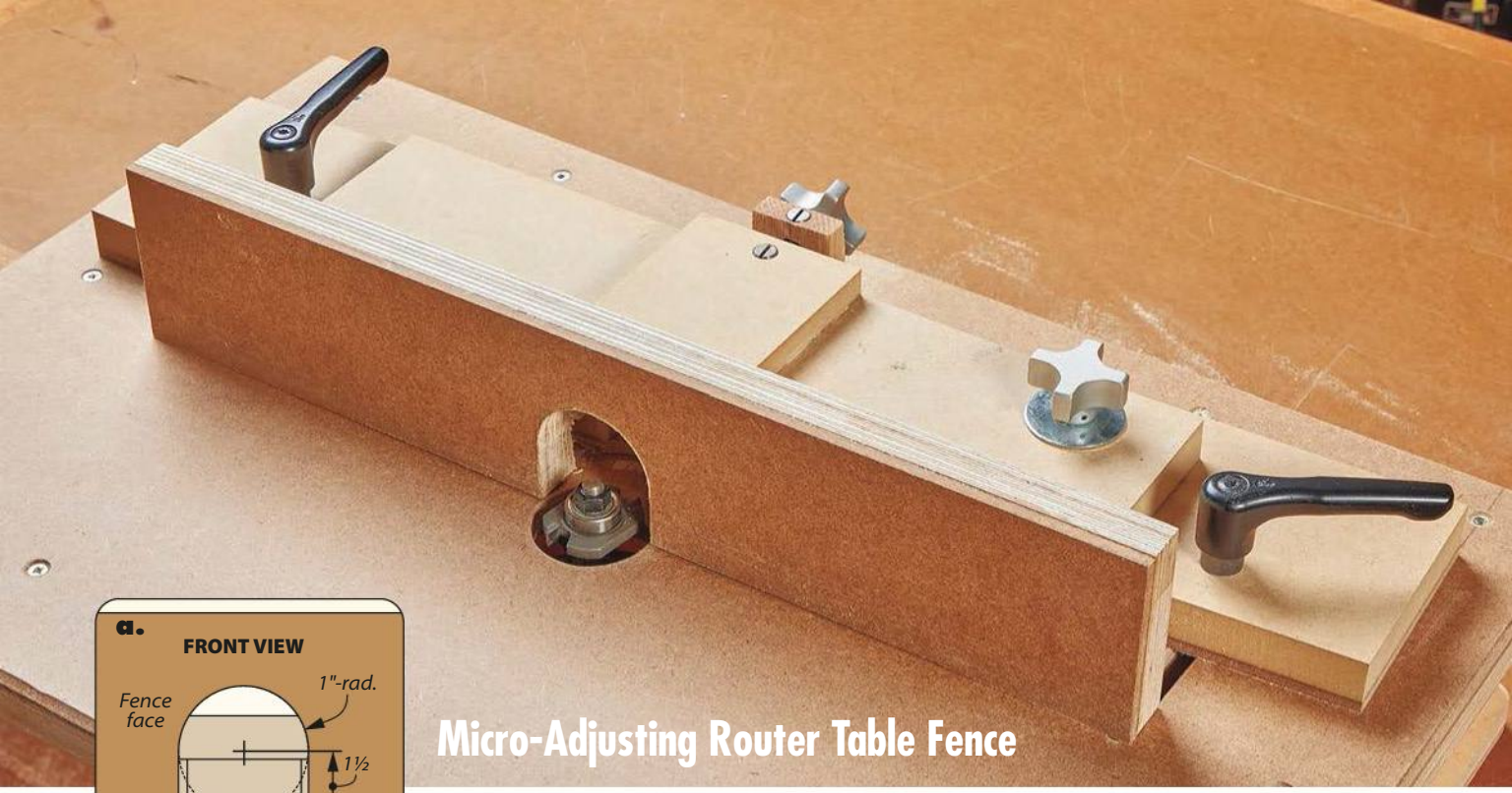

Micro-Adjusting Router Table Fence

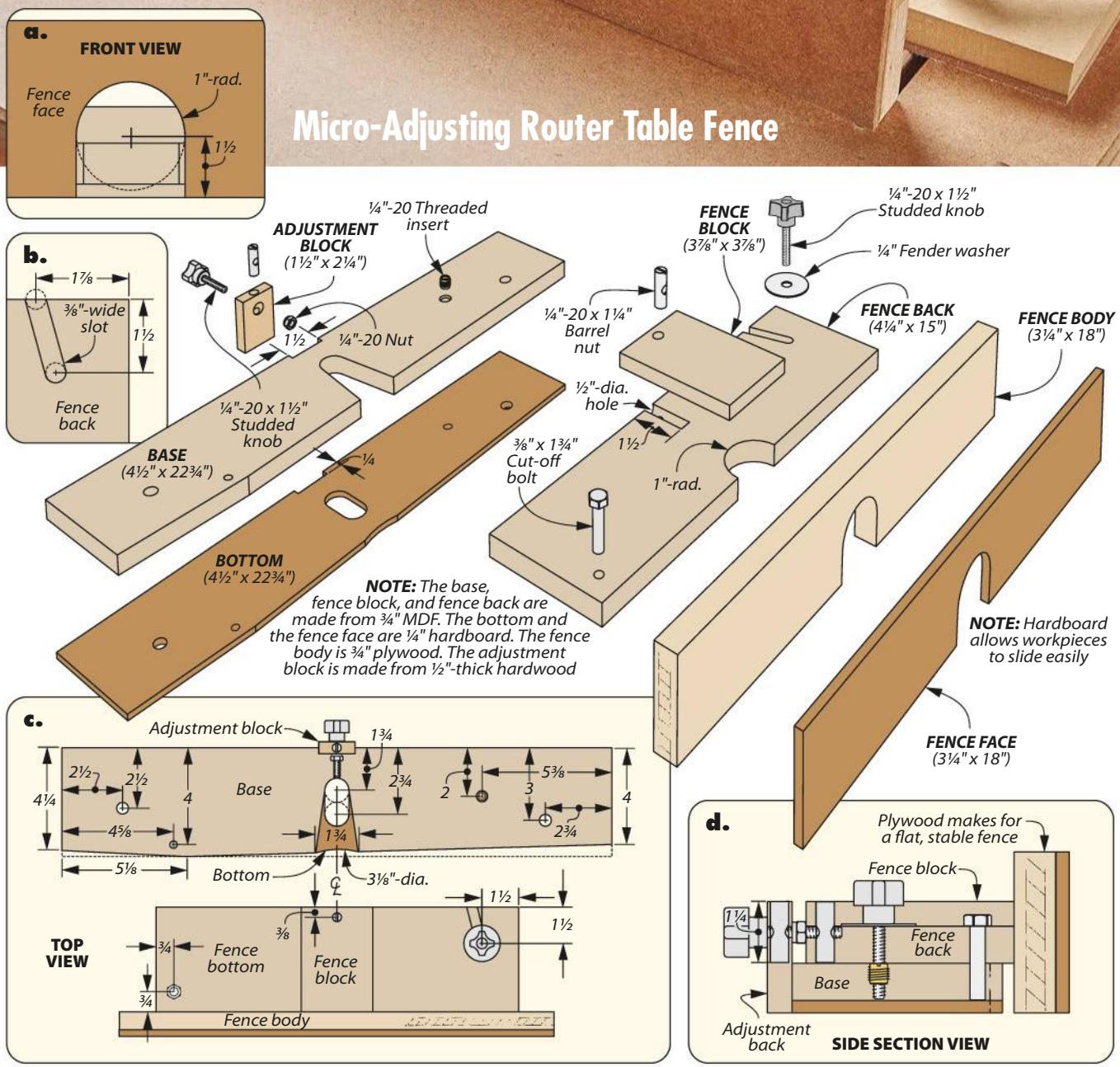

In my shop, the router table sees a lot of use, especially for joinery. And, when it comes to joinery, a precise cut makes all the difference — which is why I whipped up this micro-adjustable fence.

The gist is this: the base assembly (which locks down to your router table) is connected to the fence assembly by a threaded knob. Adjusting that knob minutely shifts the fence position. The fence assembly pivots off a cut-off bolt that runs through the fence back and into the base. To secure its position, I added another knob (along with a washer) to the fence bottom which runs through a slot and into a threaded insert.

This fence will work on most router tables. For mine, I used a pair of lever knobs that fit into the slots in the table. However, a pair of clamps could be used to hold down the base just as well.

Phil Huber
Urbandale, Iowa

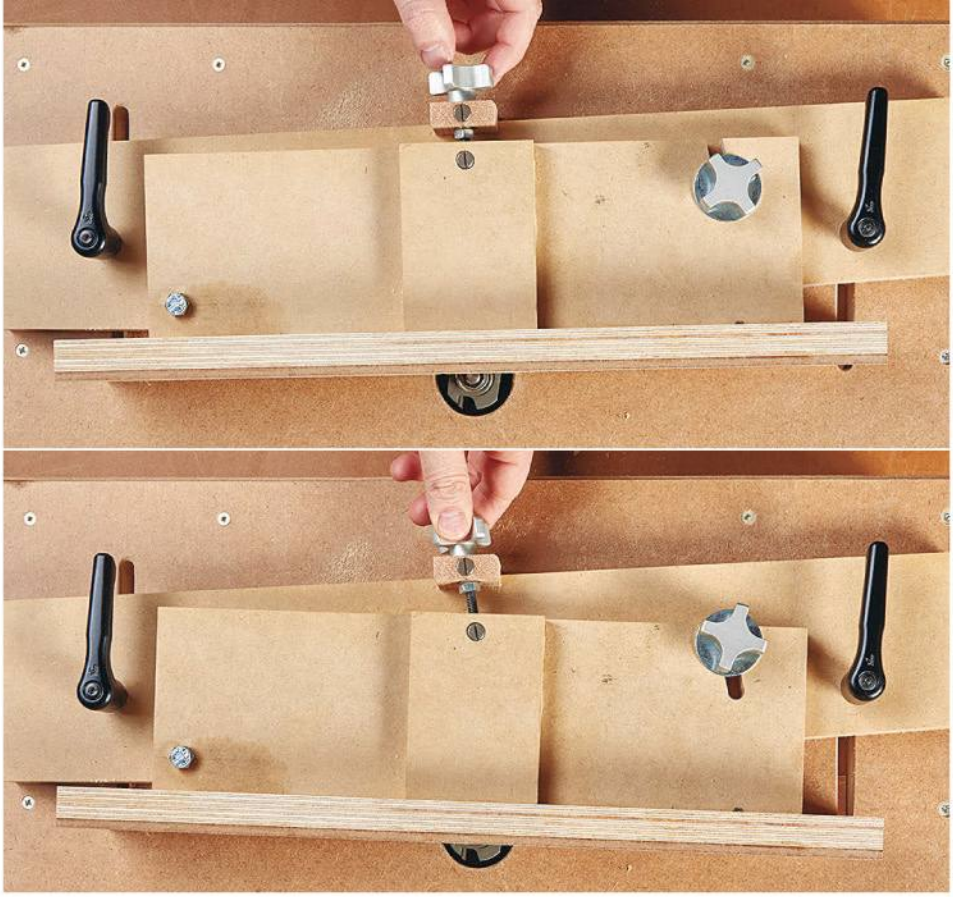

▲ Twisting the knob in the adjustment block alters the distance between the base assembly and the fence assembly. Once you've dialed in the correct position, tighten it down with the second knob.

DIGITAL WOODSMITH

RECEIVE FREE ETIPS BY EMAIL

Now you can have the best time-saving secrets, solutions, and techniques sent directly to your email inbox. Simply go to: **Woodsmith.com** and click on,

Woodsmith eTips

You'll receive one of our favorite tips by email each and every week.

The Woodworker's Choice:
Lignomat Moisture Meters

For a lifetime of woodworking:
Pin and pinless meters
from Lignomat

mini-Ligno E/D

Ligno Scanner D

Pin

Pinless

Call or Scan QR Code

800-227-2105

Lignomat.com

Epoxy Inlays (Pt. 2)

In last issue's All About, we began creating the epoxy inlay you see here, and in this edition we'll show how to turn that blank (literally) into a stylish lid for the box shown at left. One of the great things about epoxy is that, once cured, its hardness is comparable to hardwood, making it an excellent choice for a contoured top like this one.

If you've been following along with this two-part series, then you'll already have a blank ready for the lathe. If not, take a look in issue 277 to see how we made the dragonfly inlay.

MOUNTING THE BLANK

Epoxy takes at least 12 hours to fully cure, though I like to give it 24 to be safe. Once the epoxy is cured, you're ready to turn the lid to shape.

GLUE BLOCK. The lid blank can't be attached directly to the face plate on your lathe, since the holes for the mounting screws would be visible inside the finished lid. Instead, I attached it to a "glue block," which mounts to the faceplate itself. The glue block I used was made from a scrap of 2x6 cut to the same width as the lid blank.

To establish the center of this block, I marked from corner to corner on one face, then I glued the lid blank to the opposite face. Once dry, I rounded out the blanks on the band saw, leaving them slightly oversized. Finally, I mounted the faceplate onto the block as you see below and threaded it onto the lathe.

▲ Use the diagonal lines to center the faceplate on the rounded blank, then screw it in place.

Written by: Rob Petrie

Learn more
shapertools.com/origin

GO AHEAD...
THROW AWAY YOUR TEMPLATES

With Shaper Origin and Plate, you have a universal hardware installation machine.

Shaper Origin is a handheld CNC router that brings best in class portability and precision to any job. Used in combination with Shaper Plate, you easily align ready-made cut files for the most popular hinges, pulls, and other hardware on the market.

Cut-ready files from top manufacturers

Fixturing with Plate

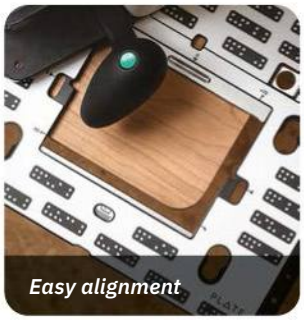

Easy alignment

SHAPER

PRECISION CUTTING SIMPLIFIED

TURING THE LID

With the lid mounted on the lathe, the first thing I wanted to take care of was truing up the edge of the lid (as in Step 1 below). Truing a wide blank like this is best done at a slow speed — about 500 RPM.

Next, I needed to clean and flatten the top of the lid, giving myself a blank slate for turning the profile. I bumped the speed up to 2,000 RPM and used a square-end scraper to flatten the lid (Step 2). After that, a round-nose scraper created the curved profile of the lid, as in the lead photo on page 12. I used a cardboard template of the final shape as a reference here (Step 3).

Once I was satisfied with the lid profile, I cut a rabbet in the base of the lid with a parting tool, as in Step 4. This rabbet forms a lip that will fit inside the box later on. With the rabbet cut, sand the lid smooth on the lathe. Finally, separate the lid blank and glue block, as shown in Steps 5 and 6 below.

▲ With the lathe set to a slow speed, turn the lid blank and glue block to a rough cylinder using a round-nose scraper. Work your way across the edge until it spins smoothly.

▲ To remove the paper and epoxy residue (as well as flatten the lid) move the tool rest to the front of the blank and work your way from the outside to the center, making cuts along the piece with a square-end scraper.

▲ As you turn, check your progress with a cardboard template. A round-nose scraper makes quick work of the lid profile, as you can see on page 12.

▲ Use a parting tool to cut a rabbet along the bottom edge of the lid. This rabbet forms the lip that fits in the top of the box, keeping it in place.

▲ To separate the lid blank from the glue block, first use a parting tool to cut down the glue block side of the joint line. Continue until the lid is almost separated.

▲ Turn off the lathe and use a handsaw to cut through the remaining waste, freeing the lid. The lid will now serve to help shape the accompanying box.

A MATCHING BOX

Now that the lid was finished, I turned my attention inward, to the box that the lid would fit into. Like the lid, I attached the box blank to a 2x6 glue block, marked out the center, then cut them to a rough (and slightly oversized) cylinder on the band saw.

As before, I mounted the faceplate on the center of the glue block, screwed it in place, and threaded it onto the lathe spindle. Roughing out the box's perimeter at a low speed came first, followed by flattening the top at a higher speed.

OPENING THE BOX. Next, I needed to hollow out the box. To do this, I began by dishing out a hole, starting at the outer rim then cutting in and down toward the center. The objective here was to establish the depth of the box. Step 7 below shows how I monitored the depth as I turned the blank.

FITTING THE PIECES. In order to create a seamless look between the lid and box, I needed to turn them together. To do this, I began by making a shallow recess for the lid across the top of the box with a parting tool (Step 8). The recess needs to match the depth of the rabbet on the lid so they fit together tightly. When nearing the outer rim, I snuck up on the outside lip of the bowl, stopping the lathe to check the fit of the lid, then expanding the recess until they fit exactly.

SHAPING THE PAIR. Once the lip fit the lid, I stuck the two pieces together with double sided tape (as in Step 9). From there, I moved the tool rest to the outside of the box to turn the exterior. I started near the bottom of the box, working my way up and gradually rounding the side with a round-nose scraper (Step 10). Once I was satisfied, I switched to a square-end scraper to begin smoothing (Step 11). Pay close attention to the seam between the lid and the box, as you'll want this to be as smooth as possible.

COMPLETE THE INSIDE. The final step was hollowing out the inside of the box. Again, I worked from the outer edge in toward the center, gradually enlarging the opening. When I reached the lip for the lid, I turned the interior so it followed the contour of the exterior. Then I flattened the inside bottom of the box with a square-end scraper.

All that was left at this point was to sand the box, then part it from the glue block as I did with the lid. To finish things, I used a simple, wipe-on varnish. This did a great job of showing off the results from this epoxy inlay project.

▲ Once the box is true and flat, start by hollowing the center with a round-nose scraper. Stop frequently and check your progress with a combination square.

▲ Create a wide, shallow recess in the box to fit the lid. Gradually "sneak up" on the size until the lid fits nice and tight, stopping the lathe to check as you work.

▲ Once the lid fits tightly in this recess, apply some double-sided tape to it, and stick it firmly in place on the box so that the two pieces can be turned together.

▲ Use a round-nose scraper to turn the side of the box and lid together. Use sweeping motions as you shape the box.

▲ When you're satisfied with the profile, switch to a square-end scraper. The flat end will create smooth, finished sides.

▲ Lastly, remove the lid and adjust the tool rest to continue hollowing out the box. Angle the tool rest to support the scraper as closely to the work as possible.

OPTIONAL INLAY PATTERNS

The dragonfly inlay you've seen in this article is only one of the options. The other inlays here are just a few ideas, and you can find the templates for these designs online at *Woodsmith.com/277*.

One of the great things about epoxy is how adaptable it is — if you can think it up, then you can probably make it with a little thought and effort. Of course, incorporating epoxy can be done in a number of ways. The box below shows another, simpler method that can be used to easily add a bit of color to a project. W

For full-size, printable patterns, visit Woodsmith.com/277

SIMPLE EPOXY INLAYING

Traditional wood inlays are a great way to dress up a project. Of course, cutting those inlays can be a tedious and time-consuming process. However, using colored epoxy achieves similar results with a lot less time and effort that you need to invest. Check out the four-step process I use in the photos below. You'll need colored epoxy, along with a syringe to apply it and spray-on lacquer to seal the wood beforehand. Using a torch or heat gun after applying the epxoy should remove any air bubbles, but a toothpick or paperclip can touch up any remaining imperfections.

To prevent the epoxy from soaking into the grain, I first apply a coat of spray-on lacquer to seal the grain around where I'll be applying the inlay.

A disposable plastic syringe allows you to precisely apply the epoxy. You can cut the plastic tip to fit the size of the groove. Make sure to overfill the groove a little bit to allow for some shrinkage.

After about an hour, use a chisel to remove most of the overflow. At this point, the epoxy will be rubbery. After it's cured (again, 12 to 24 hours) move on to a hand scraper, then finally sand the inlay smooth.

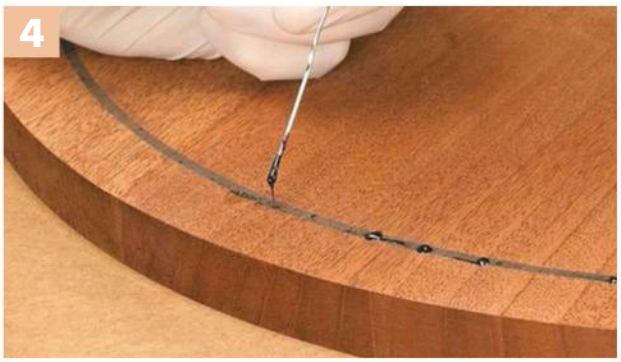

Imperfections caused by air bubbles in the inlay can be filled using a drop of epoxy on an applicator, such as a paperclip or toothpick. After the repairs have cured, sand them flush to the workpiece once more.

Woodpeckers®

MADE IN USA
Woodpeck.com

Precision Woodworking Squares

- One-piece central core.
- Stainless model includes scribing guides.
- Lip keeps the square flat on your work.
- Guaranteed perpendicular to ±.0085° for life.
- Available in inch or metric.

Precision Woodworking Square
Includes a wall-mountable Rack-It®
12"....$129.99
12" Stainless Steel....$149.99
Other Sizes Available on ***Woodpeck.com***

Precision Woodworking T-Squares

- Scribing guides on 1/16" centers.
- Beveled edge reduces parallax.
- Tight tolerance laser-engraved scale.
- 600mm metric version available.

Precision T-Square
Includes a wall-mountable Rack-It®
TS-12 12"....$129.99
TS-24 24"....$149.99
TS-32 32"....$179.99

in-DEXABLE® Combination & Double Squares

- Push-button index locks head at any full-inch.
- Laser-cut scribing guides for precision parallel lines.
- Retractable support keeps head aligned to your stock.
- Available in inch or metric.

in-DEXABLE Squares
Includes a wall-mountable Rack-It®
Double 6"....$129.99
Center Finder 6"....$139.99
Combination 12"....$169.99
Protractor 18"....$239.99
Other Sizes Available on ***Woodpeck.com***

Spline Jig

- Works with both table saw and router table.
- Spline grooves or dovetail keyways.
- Cut splines in projects up to 36" long.
- Stops included for repeat positioning.

Spline Jig....$159.99

Hold-down clamps sold separately.

Router not included.

Rout-N-Plane® Benchtop Board Mill

- Perfect for end grain cutting boards.
- Adjusts to work with almost any size or style router.
- Two sizes: 15" and 24" wide. Both work from 3/4" to 3" thick.
- When it won't fit your planer, plane it with Rout-N-Plane!

Rout-N-Plane Benchtop Board Mill
15"....$169.99
24" XL....$209.99

Router Plane

- Includes square & spearpoint blades.
- Blades lapped perfectly flat & delivered razor-sharp.
- 12 blade positions ensure maximum access & support.
- Fine-thread adjustment with no backlash.
- Ductile iron base with black-nitride treatment.
- Optional fence guides plane parallel to an edge.

Router Plane
...$269.99
Fence Add-On Kit....$59.99

ULTRA·SHEAR® by Woodpeckers

ULTRA·SHEAR FREE* SHIPPING ON ROUTER BITS & SAW BLADES
*US 48 States only. Ultra-Shear brand only. Cannot be combined with other products.

Finger Grip Groove Bits

These bits create a subtle concave recess in the edge of your cutting and serving boards. Bearing controls depth of cut.

Carbide-Tipped, Finger Grip Groove Bits, Round, 2-Flute
1/2" Shank *for 1-1/4" boards....~~$54.17~~* **$46.99**
1/4" Shank *for 3/4" boards....~~$48.05~~* **$39.99**
1/4" Shank *for 1" boards....~~$51.93~~* **$43.99**
More Router Bits are available on ***Woodpeck.com***

Flat Top Grooving Saw Blades

ULTRA·SHEAR® by Woodpeckers

When you need flawless, flat-bottomed cuts, our 40-Tooth Flat Top Grooving Blade delivers. The chisel tooth design yields a perfectly square groove.

10" x 40 Flat Top Grooving Blade, 5/8" Arbor
1/8" Kerf....*~~$166.78~~* **$149.99**
3/16" Kerf....*~~$186.83~~* **$179.99**
1/4" Kerf....*~~$196.86~~* **$189.99**
Other Saw Blade options available on ***Woodpeck.com***

Visit ***Woodpeck.com*** *for hundreds of other American Made Tools!*
Woodpeckers, LLC • Strongsville, Ohio • 800·752·0725
Prices are subject to change without notice.

Also Available at Your Local Woodcraft Store! WOODCRAFT®

Elevating Plywood

▼ Baltic birch's thin, hardwood plies make it strong and stable.

If you've been a longtime subscriber of ours, it will come as no surprise that we have a clear penchant for using plywood — more specifically, Baltic birch plywood. The reason for its frequent use may seem clear to some: strength, durability and stability throughout the seasons. However, let me take this time to dispel any pestering speculation concerning its validity and place in projects outside the shop.

The influence of its use, for me, can be attributed to the works of Donald Judd. Judd was an American artist associated with the Minimalism movement. Much of his work was constructed using industrialized materials such as plexiglass, iron, steel and plywood. Like Judd, and for many of us, the choice of material is often dictated by what's readily available or accessible. And, rather than seeing this as a constraint, Judd viewed this as an opportunity to focus on the materiality of the material and how that translates into a practical form.

An early example of this methodology is *Chair 84*. It's a painted plywood chair that was constructed in serial form – which was a common theme in Judd's work. Originally, these chairs were built by a

Written by: Dillon Baker

local carpenter using hewn pine found at a lumberyard. Geometric in shape, they contained cubic storage space directly below the seat, which varied in orientation to further accentuate the chairs proportions and the possibilities of the material.

Furthermore, the contrast in the applied color against the inherent wood tones illuminates the aesthetic quality of the material's composition. This is an approach I have attempted to explore and integrate into my own work. The photo on the previous spread is a version of a plywood chair I did for *Popular Woodworking No. 258*. This version, in many ways, embodies several of the physical characteristics of Judd's *Chair 84*. Although, I wanted to take things a step further by using traditional exposed joinery in conjunction with modern sheet material. I found the concept of marrying these two elements ostensibly oxymoronic, but in a way that instigates the possibilities of plywood's use in "fine" furniture.

▲ This stool takes full advantage of the materials from which it's comprised. The interplay between the BauBuche, cherry and closed-weave cane make for a visually dynamic ensemble.

Another process I have adopted is pairing birch plywood with hardwoods. The stool, shown above, is a project from *Woodsmith No. 269*. It consists of cherry hardwood and a manufactured product called BauBuche. This is a laminated sheet good comprised of layers of European beach. This product has a high compression strength and an aesthetic resemblance to Baltic birch. You'll notice the coloring of the plies accent the cherry, while the vertical orientation draws the eye up towards the halo-shaped form that makes up the seat. The union of these two materials provides an engaging visual juxtaposition as well as sense of strength and stability.

Going beyond the use of plywood as the main structural component of a piece, there is the option of further underscoring its composition through means of physical manipulation. Take the spice cabinet in *Woodsmith No. 262* as an example. Strips of plywood were cut (in various lengths) at a 45° angle and then reassembled to create the pattern you see here. The marshalling of these segments does two things: one, it creates a perceived surface quality — a sort of illusion of texture. And two, it generates a composition that becomes the cynosure of the piece.

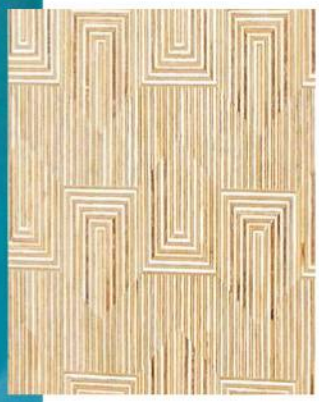

◄ A geometric, bismuth-type pattern is created using the cross sections of the plywood. The material's physical composition then becomes the focal point.

▲ Using modern materials and traditional techniques make for a unique and novel structure. Embracing the juxtaposition between the two deepens the connection between the past and future.

► Introducing a bullnose profile to the rocking edge adds visual interest while minimizing friction using a single contact point.

Something else I enjoy experimenting with that helps redefine the perception of plywood is the treatment of this modern material in a conventional way. This can be done by means of using traditional joinery (exposed or concealed) more commonly seen in hardwood projects, or perhaps the introduction of a secondary material. Take the example of the rocking stool you see above. Notice how the top registers with the base by way of oversized walnut through dowels. The contrast between the two materials is emphasized, visually, through the sheer size of the dowels. The construction method thus becomes a celebrated aesthetic component. You'll also notice the woven paracord section that nests between the dowels. This continuous piece of static cord adds color while embracing its utility and compositional strength when applied as an upholstery.

When thoughtfully combined, these materials and construction applications work in tandem to create a striking, well-balanced piece. What I have come to appreciate about this method of designing is the initial impression of a limiting condition — that being the area of a 4'x8' sheet of plywood. However, when confronted, it impels one to take a more conscientious approach to the design process. The spatial parameters are pre-set: now, the challenge is yours to make the most of the space. W

GETTING THE MOST FROM YOUR MATERIAL

An exercise I have adopted and put into practice throughout the last few years is using a standard 4′x 8′ sheet of plywood as the catalyst for design. The objective being: utilize as much of the sheet as possible with minimal waste. One of the unique elements of this assignment is the nature of its framework, which forces one to design within the limits of spatial availability. The chair, you see here (*Popular Woodworking No. 258*), is an example of this exercise. Working within these parameters influences one to be concscious of the whole. This begins with a process called "nesting" which aids in not only eliminating waste, but helps establish the procedure in which each piece is cut from the sheet of plywood. It's like designing a giant jigsaw puzzle, but one you can sit in upon its completion.

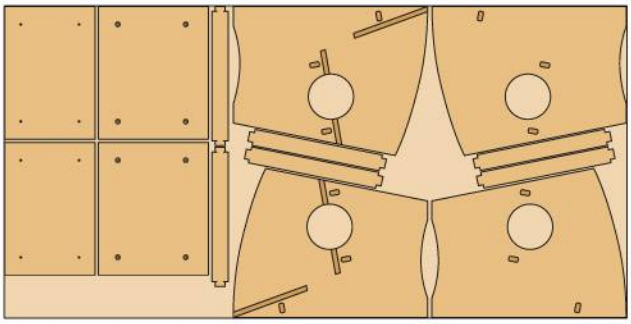

Simple Shop Accessories

Attention is a finite resource, and "big" things tend to take up more of it, whether that's in life or in the shop. For this edition of Great Gear, we'll be taking some time to look at a few "smaller" items in the shop — things you may overlook in your day-to-day woodworking, but which are certainly handy, and can make a big difference in the quality of your shop work.

GATOR SANDPAPER

The first product on the docket is the sandpaper shown on the next page. *Gator* makes a number of different kinds of sandpaper styles (for more than just wood, though I'll stick to the ones that relate to woodworking here). As you can see in the photos on the next page, I took a look at five varieties of sandpaper.

REPTILION SANDING SHEETS. The sanding sheets come in small and large sizes. As with all sanding sheets, they can be used by hand, but you'll get more mileage out of them when using them with a sanding block. Despite the fun look of the "scaled" sandpaper, I find it doesn't make much difference in the function. What does though is the kind of abrasive they use.

CERAMIC ABRASIVE. Like many high-quality abrasives, these sheets are made with ceramic alumina.

Written by: Rob Petrie

This material is chemically identical to aluminum oxide, the abrasive you'll fine in most sandpapers, but where they differ is in structure. The crystalline structure of cermic alumina results in it being harder and more brittle than most aluminum oxides — both of which are benefits. While it may seem counter-intuitive, the increased brittleness of the ceramic alumina results in a microscopic fracturing rather than blunting, meaning that the cutting capability is maintained even as the material is worn away.

Gator advertises that their ceramic alumina abrasive lasts up to four times as long as standard aluminum oxide competitors. Given the way ceramic alumina wears down, this is true — a piece of this sandpaper will maintain its effectiveness longer than aluminum oxide, as long as you have a forgiving surface to attach it to. Using something such as a cork-faced sanding block prevents excessive pressure from being applied, which would result in excessive fracturing and reduce the lifespan of the sandpaper.

POWERNET SANDING SHEETS. In addition to the sanding sheets, *Gator* provides both orbital and detail sanding sheets. These also use ceramic alumina, along with a hook and loop backing to secure to your sander. As you can see in the photos here, you'll find two types. The first is a standard, solid disc with dust-relief holes. With the exception of the backing and circular shape, these are nearly identical to the sanding sheets, and function just as well.

The second type is the net-mesh style, which comes in both discs and detail sheets. For large sanding projects, this is my preference, as the netted mesh does a drastically better job of clearing away dust when used with a vacuum.

Each of the net-mesh orbital sanding discs comes with a felt backer in the package. Just like a cork face on a sanding block, this pad extends the lifespan of the discs (as well as the hook and loop interface on your orbital sander).

Overall, *Gator* sandpaper is a quality product. While you might pay a little more up front, with the right usage you'll find that these may last you much longer than cheaper alternatives.

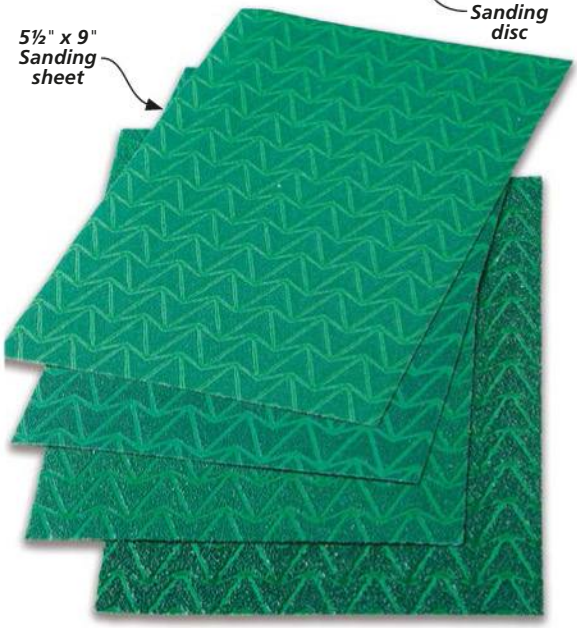

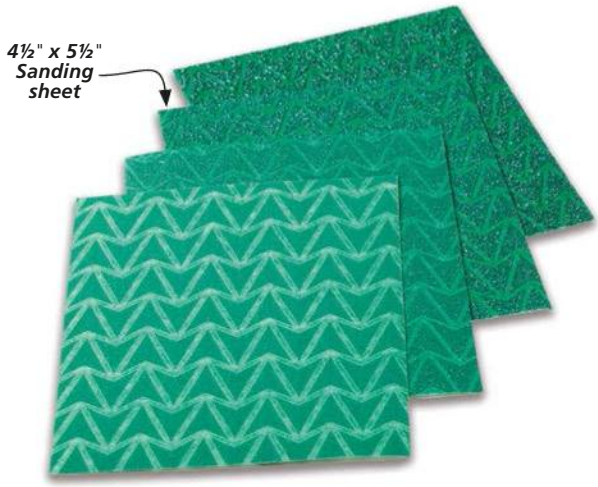

▲ Each package of net-mesh orbital sanding discs comes with a felt backer to increase the lifespan of both the discs and the hook & loop interface on your sander.

▲ The dovetailed end of this clamp fits easily into a routed dovetail slot. The V-shaped clamping pad provides a solid, two-point grip on boards and dowels alike.

GRR-RIP CLAMPS

The next product we'll be looking at is one from *MicroJig*. Last year we looked at another set of dovetail clamps from *MicroJig*, which clamped down using a ratcheting cam system. The ones you see here are a typical quick-grip design, and I must admit, I prefer this style of quick clamp.

As dovetail clamps, Grr-Rips need an accompanying dovetail track, but these are easy to make with just a 14°, ½" dovetail bit and a sheet of ¾" plywood (as you can see in the photo below). Once you have a dovetailed board, it can be clamped down to your workbench while you use the dovetail clamps on the workpiece above.

The bar keep these clamps aligned, which for a quick-grip clamp means a lot less fussing over your position during that last trigger pull. The quick setup of these makes them ideal for tasks like routing dadoes in case joinery, drilling pocket holes, or making a taper jig.

As I mentioned earlier, I prefer a quick-grip style clamp to a ratcheting one. While neither is going to provide the kind of strength that an F-style clamp offers, the quick-grip provides a firm grasp with less work than the ratcheting kind, as if you run out of "ratchet" then you need to reposition the clamp head, defeating the purpose of a quick clamp like this one.

Additionally, compared to other quick clamping options, I found that the V-shaped clamping pad provides a good deal more "grip." In short, if you use dovetail tracks in your shop (or if you're interested in incorporating them), then these will be a great choice, and superior to your typical quick-grip clamps.

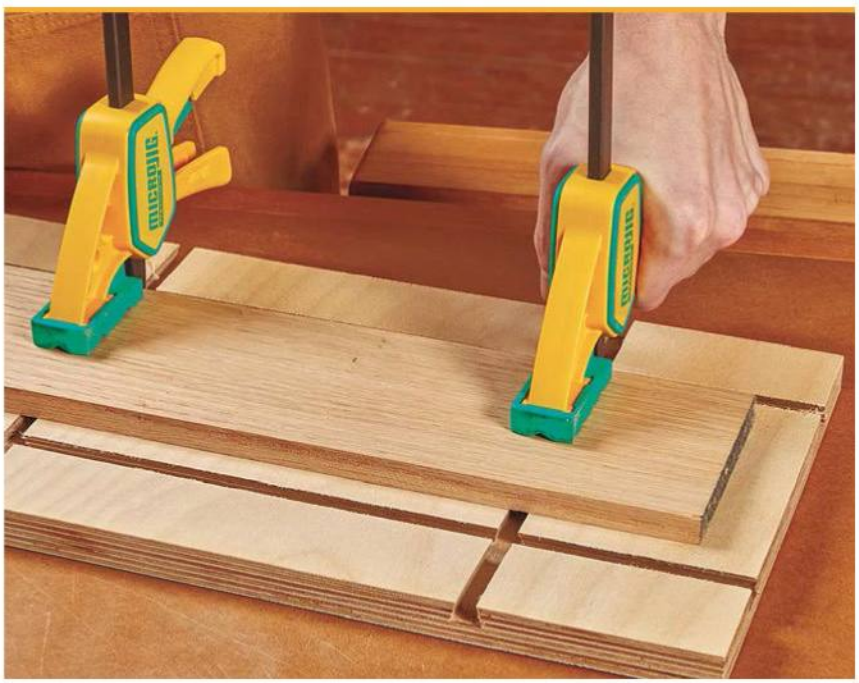

◀ A classic, ratcheting quick-clamp design makes these clamps easy to use on the fly when you have a dovetail track setup.

AWAKEN YOUR SENSES, EMPOWER YOUR CRAFT.

Feel the excitement, hear the buzz of innovation, and smell the fresh-cut wood—it's all happening under one roof at the AWFS®Fair. Explore cutting-edge tools, engage in live demos, and breathe in the inspiration.

BUILD THE FUTURE & THRIVE IN 2025

AWFS® Fair
JULY 22-25, 2025
LAS VEGAS CONVENTION CENTER
LAS VEGAS, NEVADA

REGISTER NOW!

SCAN ME

www.awfsfair.org

GRR-RIPPER 3D PUSHBLOCK

The third item on our Great Gear list is another tool from *MicroJig*. We've taken a look at the simpler version of this pushblock (called the Grr-Ripper 2Go) in a previous edition of Great Gear, but Grr-Ripper 3D Pushblock is a significant step up.

You can see many of the features of this tool in the photos on this page. The first thing to take note of is the adjustable central arm. Threaded on with small thumbscrews, this easily shifts back and forth to avoid the blade and provide pressure where it's needed most. The "SafeRip Kit" that ships with the pushblock attaches to this arm, providing a "warning" of where the central arm is located (photo below). When the pushblock is against the fence, the ruler will tell you where the arm is at, making it easy to avoid the blade (and any last-minute paranoia before making the cut).

BALANCE SUPPORT. Along with the adjustable arm, another key feature of the Grr-Ripper 3D over its simpler cousin is the balance support. This broad piece can be attached to the side (again with small thumbscrews) and adjusted to match the height of the workpiece. While it isn't necessary for every cut, it comes in handy with narrow workpieces that would otherwise risk tipping the pushblock. Additionally, it can be used with other tools, such as the router table (as you can see below).

PERFORMANCE. So, how does the Grr-Ripper perform? The rubber bottoms of the arms provide ample traction, equivalent to a jointer push block. The balance support does its job fine, though you'll need to be careful not to set it too low or you'll lose the traction on your arms. As I worked with the tool, I found myself wishing it had a cleat at the back to help pull along tougher workpieces, and apparently I'm not alone — *MicroJig* offers a cleat attachment on their website that threads onto the back for this very purpose.

Overall, I was satisfied with the Grr-Ripper 3D Pushblock. Of course, it's not something that I'm going to reach for every time I use the table saw, as not all cuts require a pushblock. However, I've had my share of table saw scares, and this is a great tool to have nearby for thin or knotty workpieces that might risk kickback.

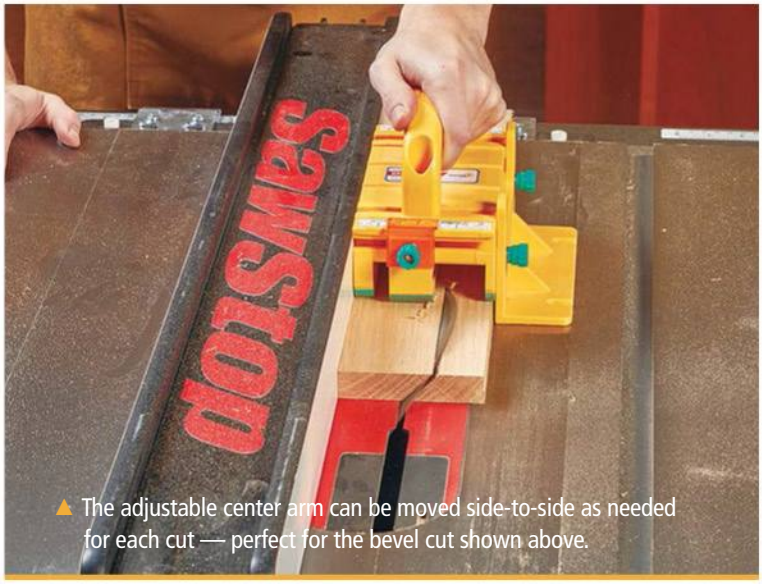

▲ The adjustable center arm can be moved side-to-side as needed for each cut — perfect for the bevel cut shown above.

▼ MicroJig includes a "SafeRip Kit" with the Grr-Ripper, which threads into the central arm. The orange piece makes it clear where the center arm is located so you can avoid the blade while making a cut.

▲ The Grr-Ripper isn't just a tool for the table saw. By using the balance support it provides a sturdy grip when routing to a template, such as with the corbel here.

BENNINGTON SMART CASTERS

The last product I want to discuss is the set of casters you see on this page. These are R7 casters from *Bennington Manufacturing*. They're heavy duty, with thick, metal plates attached to swiveling wheels. The casters are mounted on a piston, which locks and unlocks to activate and deactivate the casters. This means that all you need to do is lift the casters off the ground briefly to extend or retract them.

INSTALLATION. Installing casters isn't rocket science, and the instructions provided will likely be enough for many woodworkers. However, there are a few things I did differently to get the best results, beginning with the template you see below.

It seemed like it would take a lot of fussing to directly mark the locations of the holes in the brackets on the legs of my workbench while also making sure they stay centered and square. Instead, I transferred the hole locations to a small piece of hardboard, then used that as a template that I could easily square to a leg and clamp up while I drill (Step 1).

The second change I made was to upgrade the hardware. *Bennington* includes a set of sixteen woodscrews for the four casters, but those seeemed a little light for the 700-pound capacity of these casters. *Bennington* recommends upgrading to ¼"-20 hardware for heavier loads, which is precisely what I did. Once I had drilled all the holes, I mounted the casters with bolts, nuts, and washers. After flipping the bench back over, I found this made for a quite sturdy connection.

USE & PERFORMANCE. Once the bench was upright again, it was time to remove the set screws. These screws are there to hold the pistons in place until after installation, preventing off-center force from being applied as you install them, which could damage the piston mechanism. With the set screws out, it was time for lift off (Step 2).

To activate the casters, I lifted one side up 1" (until I felt the caster wheels come off the ground), then I put it back down, setting it on the wheels as the pistons activated. After lifting the other side, my bench was ready to roll.

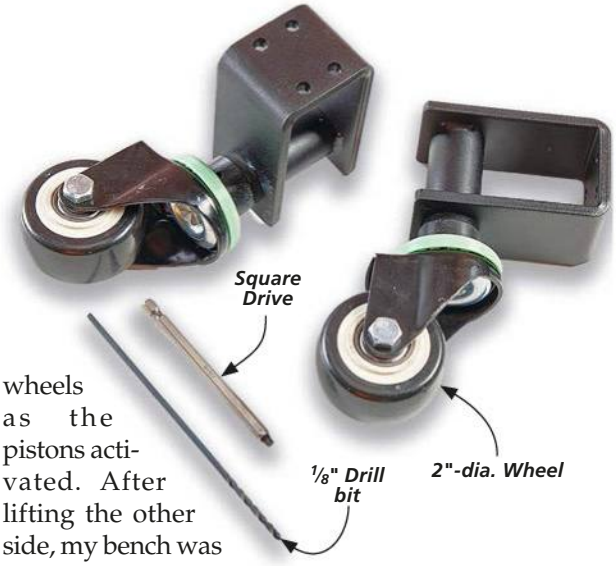

I was pleased by the performance of these casters. They rolled across the wood-panel floor you see in these photos just as well as the concrete one the other side of our shop. Once I had my fun, I lifted each side to retract the casters and set the workbench back on its own legs again, stable as ever (Step 3).

All in all, I was impressed with these casters. They're extremely easy to use and they sit on the inside of the legs of my workbench, meaning no tripping hazard, and visitors to your shop might not even notice they're there. The casters roll around quite well across a variety of surfaces, and they're plenty strong, even when used on a heavy workbench like this one. If you need to mount a bench, workstation, or power tool in your shop, I'd recommend giving these a try.

The handle on the side of the gear box is what makes the actors come alive. Turning the handle clockwise will get the show in motion.

Written by: Erich Lage, Project Design; Chris Fitch

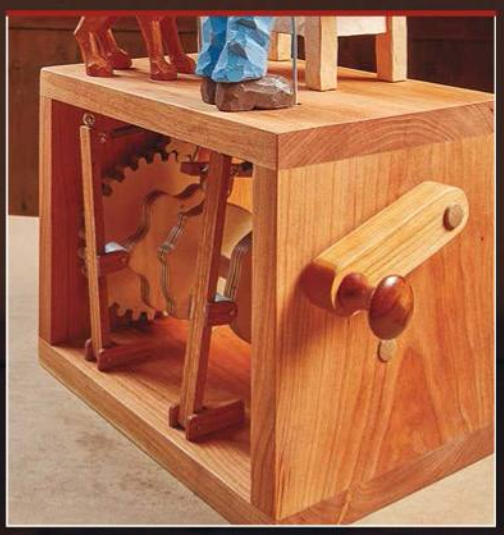

▲ From the back of the gear box you see levers that control the horizontal movements (the dog's tail and the man's head).

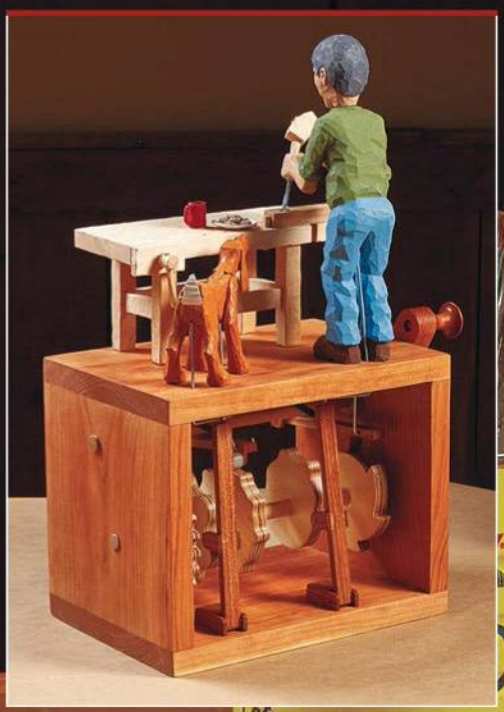

▲ Here you are a witness to man's best friend's unrelenting pursuit of cookies. He's not interested in the coffee.

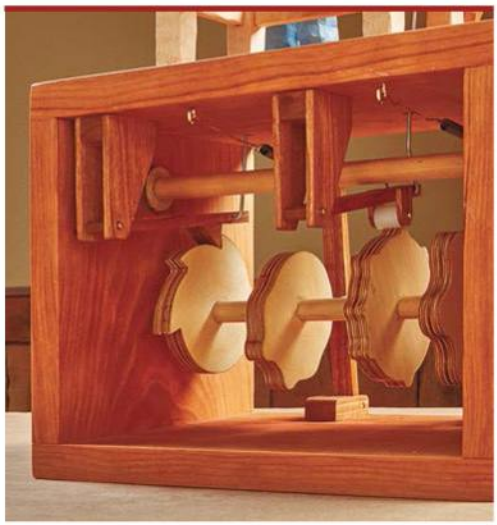

◀ The levers that control the vertical movements can be seen from the front. They bring to life the dog's head and the mallet that's chopping wood.

4 Movement Automata

This is a simply magical project that wakes up the child in folks of all ages. It's also a fine way to clear out the wood scraps in the corner of the shop.

There's a good argument to be made that creating things that move stirs something deep inside of us. When those movements are realized in a drama such as you see here — that stirring sparks to a flame that warms us. I see it in the smile that shows whenever someone turns the handle on this automata and the actors on the stage come alive.

Although this project is small, there's a lot going on here. In this issue we'll make the gear box — the box holds the under-the-hood workings that make the automatons on the stage above move. In the next issue we'll carve and fit the actors that reside on the top.

PLOT SUMMARY. Let's briefly walk through the story unfolding on the stage. The dog wants cookies. It shows this in two movements — the wagging tail is a horizontal movement and his head bobbing is a vertical one. In response to the dog's request, the man's head is shaking 'no,' which is a horizontal movement. While shaking his head, he pauses the chopping of the mortise with a mallet (a vertical movement).

You have options when it comes to making the gears. You can copy and scale the ones on the following pages, or you can download a DXF file at our website. Either way, it's time to turn the page and start the adventure.

Illustrator: Becky Kralicek

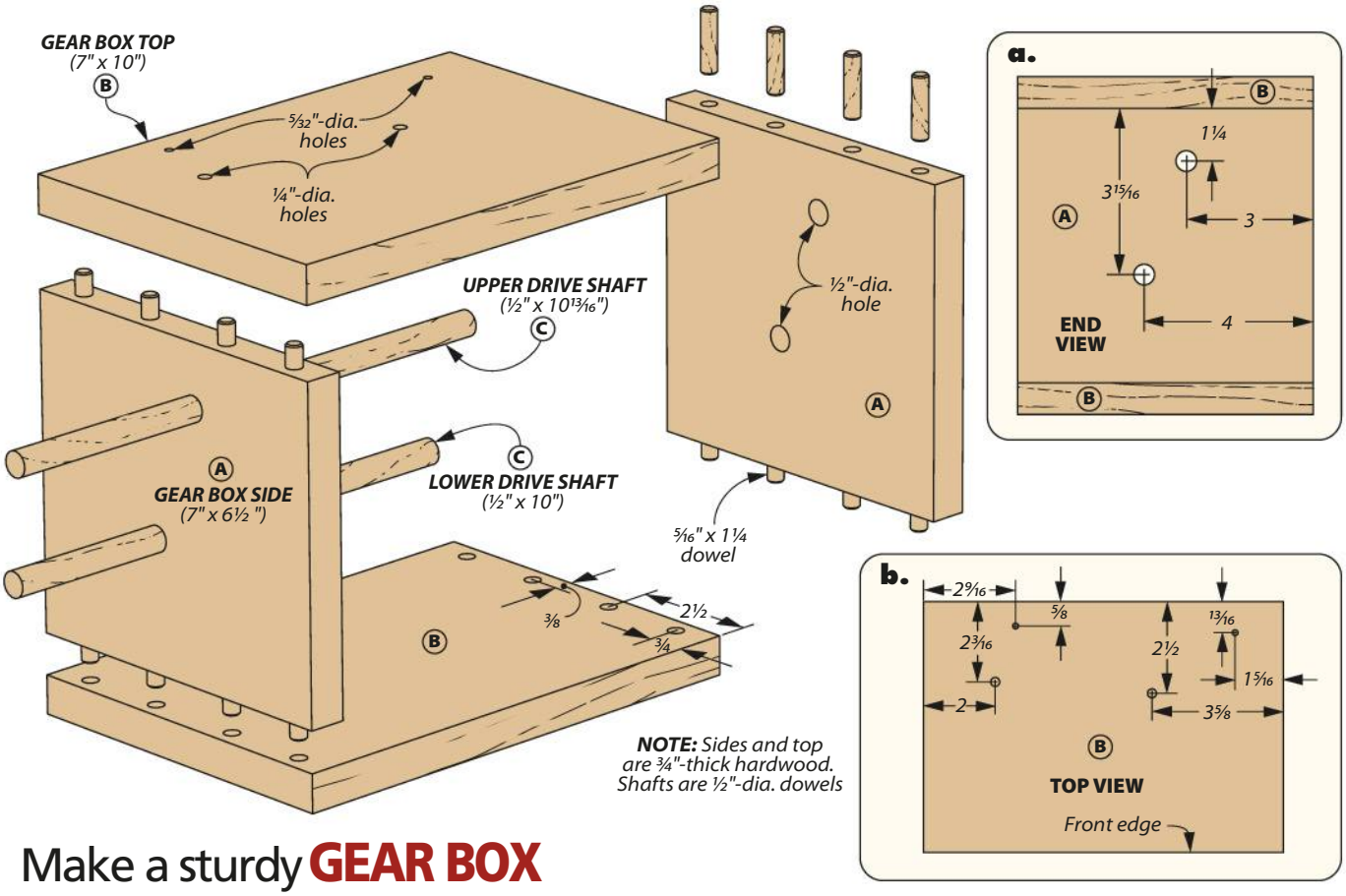

Make a sturdy **GEAR BOX**

The project starts by making the case that holds the gears of our automata. As you see above, it's a simple box that employs dowels as joinery. To get the ball rolling, cut the gear box parts to size, lay out and drill the holes in the ends of the sides (a pre-made dowel is used here). Lay out the shallow mating holes on the top and bottom parts of gear box and drill those as well. If you have a doweling jig and dowel centers this is an ideal time to use them.

Next, lay out the locations of the holes for the two drive shafts (detail 'a') in the sides and drill them at the drill press. Lastly, you'll need to drill the holes in the top that are shown in detail 'b.' These holes are for the wires that tie the machinery to the actors on the stage that is the top of the box. You'll put all of that together next issue.

Now you can glue up the box. While it's in the clamps, let's review the drivetrains.

ANATOMY. The handle you turn clockwise is attached to a shaft that travels the length of the box. On the end of this shaft (inside the retainer ring) is a 9-tooth gear that acts as a reduction gear. The upper drive shaft (and gear) removes predictable patterns that can happen when turning a crank that's attached directly to the lower drivetrain.

The reduction gear engages a 27-tooth gear that turns the lower drive shaft. This shaft holds the four cams that drive the four motions of the actors. The shape of each cam determines the movement. Its profile controls the rhythm of a follower that's attached to a lever.

MAKE SOME PARTS. The knob of the handle was one that was left

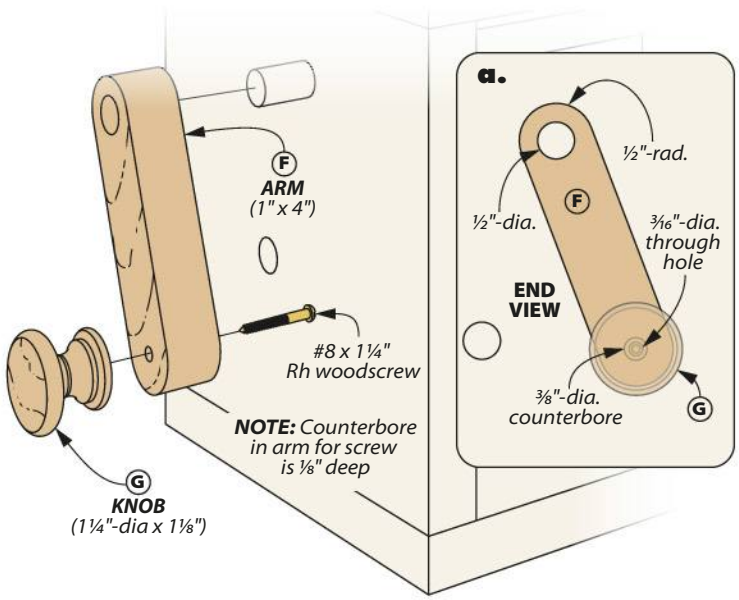

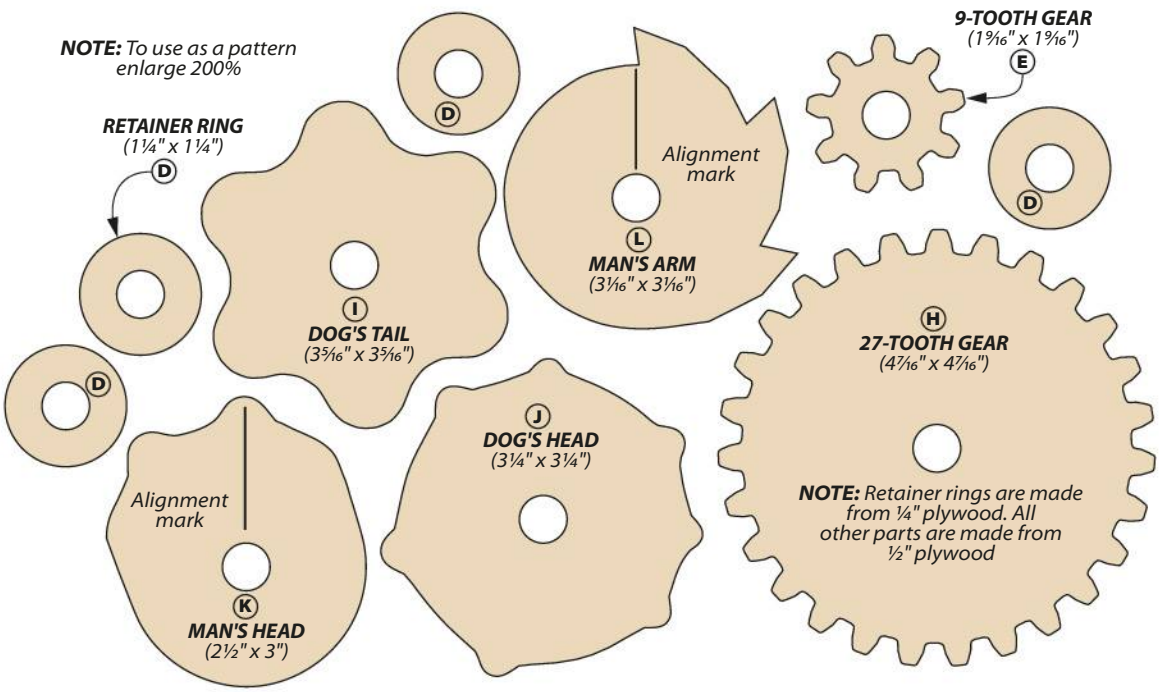

GO 2 Online Extras

To find out more on making and shaping gears, go to:
Woodsmith.com/278

over from a previous project. Detail 'a' at the bottom of the previous page, shows you the dimensions of the arm. After you've assembled the handle, glue it to the end of the shaft.

GEARS & CAMS. To make the machine parts you can scale the drawings you see above and make the parts with your favorite woodworking tools. If you have a CNC machine, you'll find a file online (*Woodsmith.com/278*) that has these patterns. To attach the cams and gears I marked the location on the shaft (box below), applied glue all around the shaft in that area and then rotated and pushed the cam/gear along into place. The rotating motion helps distribute the glue. The box below also shows you how to coordinate the man's actions.

ASSEMBLING THE DRIVE TRAINS

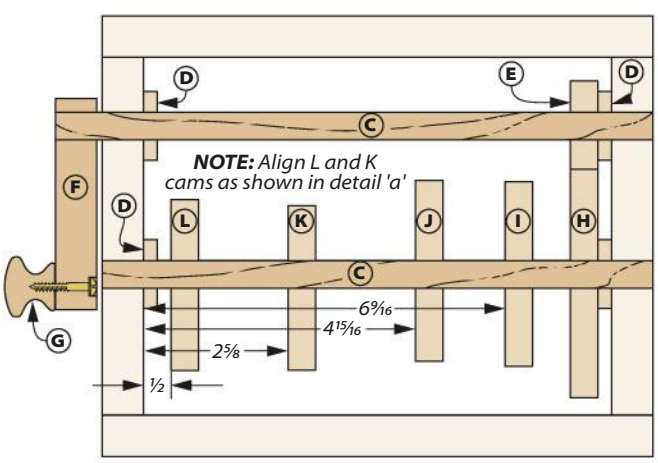

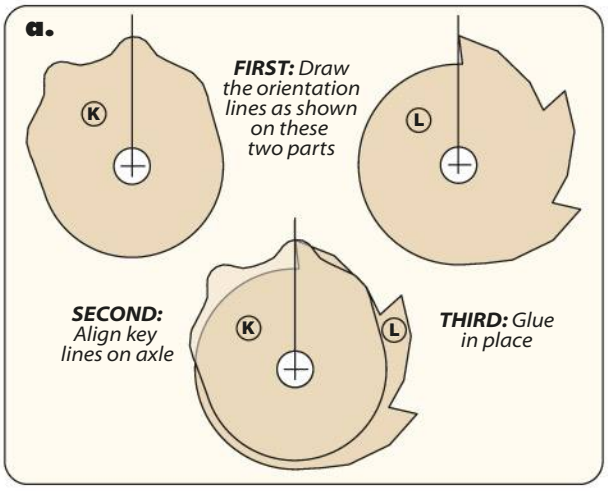

Glue Up the Drivetrain. To make the drama that's happening look realistic the man needs to be looking at the mallet while he's swinging it. This requires that you align cams 'K' and 'L' as shown in detail 'a' above. The other two cams that control the dog's actions move independently. He's not listening to the man anyway.

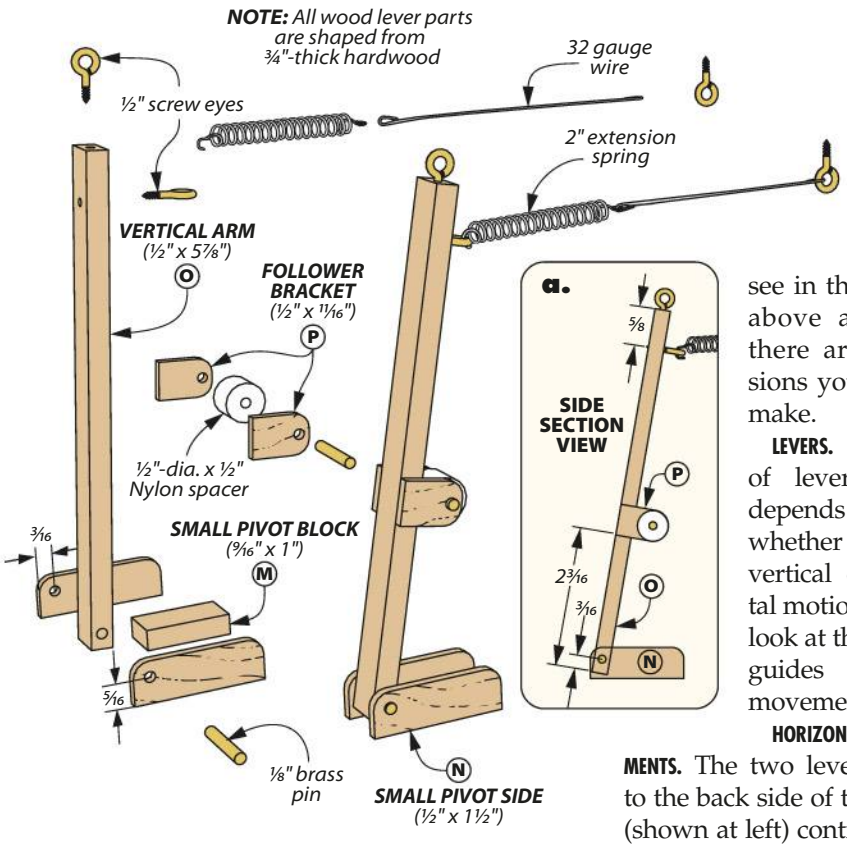

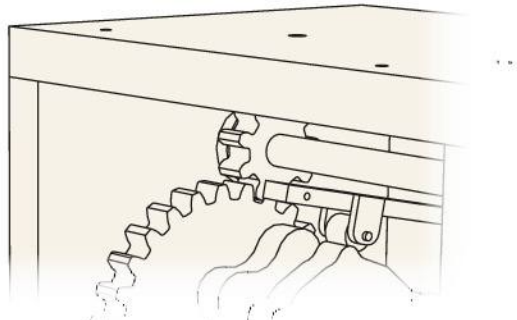

Assemble the **LEVERS**

With the gear box completed and off to the side, it's time to make the mechanisms that will transfer the energy created by the drivetrain on to the automata. For the sake of brevity, I'm referring to these mechanical assemblies as levers. As you see in the drawings above and below, there are two versions you'll need to make.

LEVERS. The style of lever you use depends upon whether you want a vertical or horizontal motion. Let's first look at the lever that guides horizontal movements.

HORIZONTAL MOVEMENTS. The two levers attached to the back side of the gear box (shown at left) control the horizontal movement of the dog's tail and the man's head shaking 'no' to the hungry pup.

All the small wood parts are roughed out with your band saw and planer, then fashioned and fit by hand at the workbench. The pivot assemblies are glued to the gear box and have long arms mounted to them with a brass pin that allows the arm to move freely. In turn the arms are where follower brackets are attached. These brackets hold nylon spacers that follow the contour of the cam. At the top of the arm you'll notice two screw eyes. One is for a spring that holds the arm in tension against its cam. The screw eye on top of the arm is for the wire that runs to the actor.

VERTICAL MOVEMENTS. The two levers on the underside of the top at the front of the gear box (shown below) control the dog's head, and the chopping motion of the mallet. The parts list is basically the same — just constructed differently. The arm and its follower ride on top of the cam. No need for a spring here, gravity holds the arm in place. Since these levers are up and out of the way of the drivetrain you get the added treat of watching the moving machinery at work.

ONE OF A KIND FOLLOWER. Three of the four followers have the

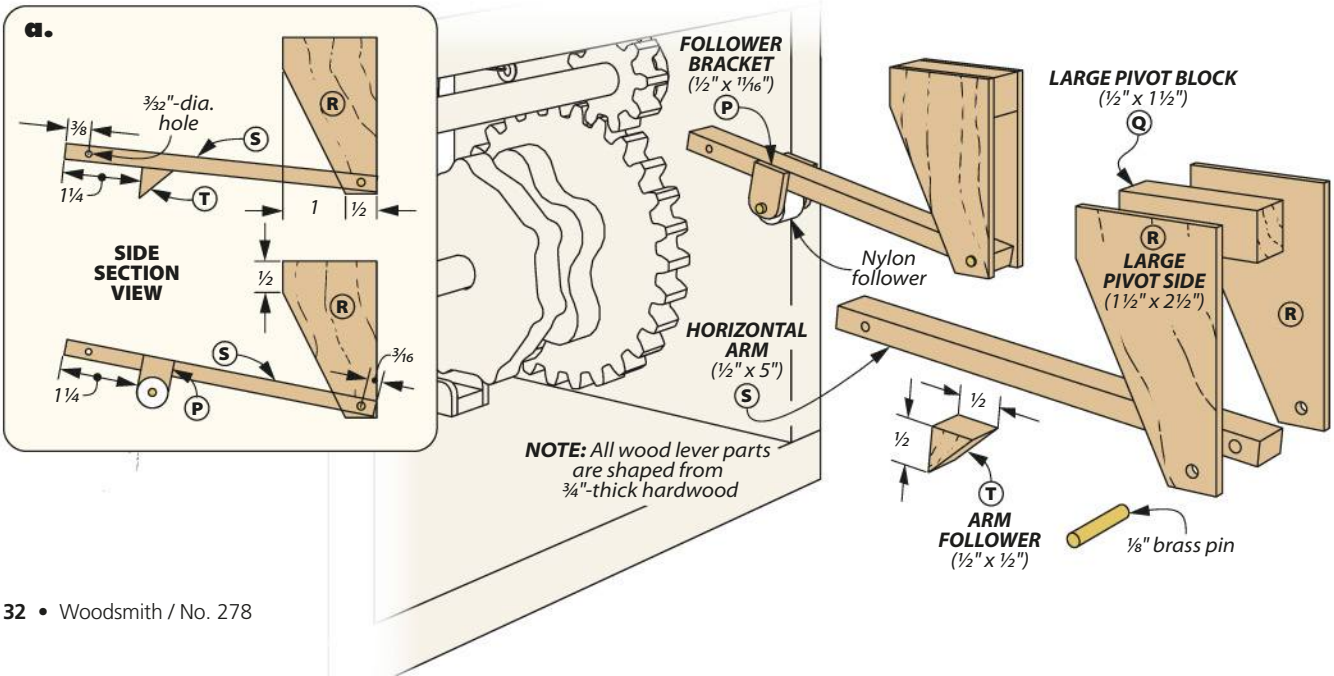

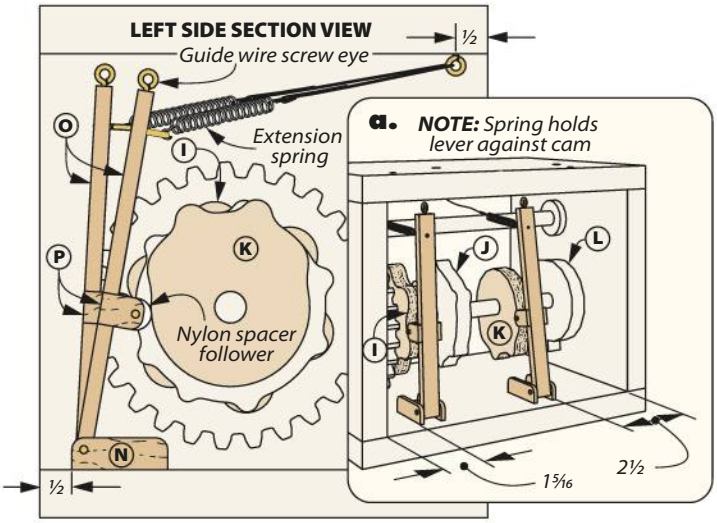

Horizontal Lever. These levers are on the back of the gear box and are held in tension by the spring at the top.

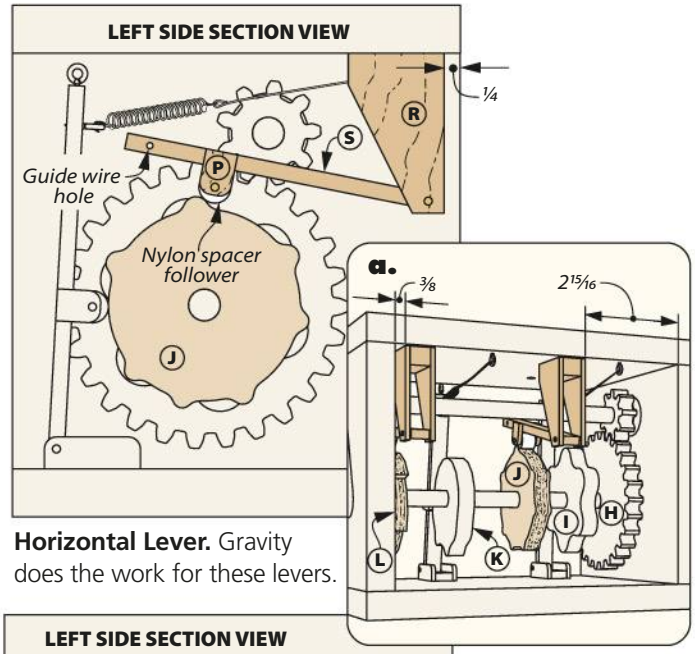

Horizontal Lever. Gravity does the work for these levers.

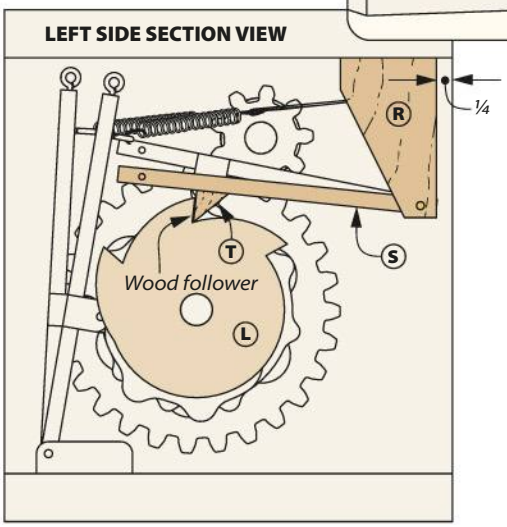

A Unique Follower. The swing of the man's arm is created by this follower.

same assembly — a nylon spacer held in place on the arms with brackets. But as you see in detail 'a' on the bottom of the previous page, one of the followers is a triangular block of wood glued to the underside of its arm. This follower and the cam it interacts with are what bring the three sharp blows of the mallet on the chisel to life.

LOOSELY SNUG. That's the goal of assembling the levers — remember friction is your enemy. While assembling all the levers I was reminded of the advice I once heard from a fellow who made crossword puzzles. The goal when writing clues was aiming for "concealed clarity."

The drawings above and to the right show the placement of the levers in the gear box. It's just a matter of applying a little glue to the pivot assembly and holding them in place for a minute or so until they tack.

Well, the gear box is ready for action and the stage is set. Sharpen up your carving tools for part 2. W

Materials, Supplies & Cutting Diagram

A	Gear Box Sides (2)	¾ x 7 - 6½	J	Dog's Head Cam (1)	½ ply. - 3¼ x 3¼	S	Horizontal Arms (2)	¼ x ½ - 5
B	Gear Box Top/Bottom (2)	¾ x 7 - 10	K	Man's Head Cam (1)	½ ply. - 2½ x 3	T	Arm Follower (1)	½ x ½ - ½
C	Drive Shafts	½-dia. dowel - 24 rgh.	L	Man's Arm Cam (1)	½ ply. - 3 1/16 x 3 1/16	•	(1) #8 x 1¼" Rh Woodscrew	
D	Retainer Rings (4)	¼ ply. - 1¼ x 1¼	M	Small Pivot Blocks (2)	¼ x 9/16 - 1	•	(16) 5/16"x 1¼" Dowels	
E	9-Tooth Gear (1)	½ ply. - 1 9/16 x 1 9/16	N	Small Pivot Sides (4)	⅛ x ½ - 1½	•	(7) ⅛"-dia. x ⅞" Brass Pins	
F	Arm (1)	¾ x 1 - 4	O	Vertical Arms (2)	¼ x ½ - 5⅞	•	(6) ½" Screw Eyes	
G	Knob (1)	1¼ x 1¼ - 1⅛	P	Follower Brackets (6)	⅛ x ½ - 11/16	•	(3) ½" Nylon Followers	
H	27-Tooth Gear (1)	½ ply. - 4 7/16 x 4 7/16	Q	Large Pivot Blocks (2)	9/16 x ½ - 1½	•	(2) ½" x 2" Extension Springs	
I	Dog's Tail Cam (1)	½ ply. - 3 5/16 x 3 5/16	R	Large Pivot Sides (4)	⅛ x 1½ - 2½	•	(1) 12" x 32 Gauge wire	

¾" x 8"- 48" Cherry (2.7 Bd. Ft.)

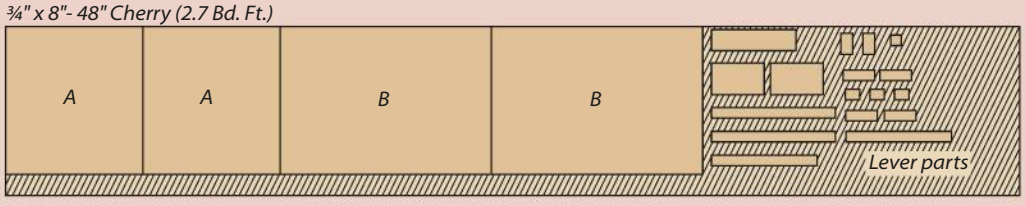

ALSO NEEDED: *One 12"x 12" Sheet of ¼" Baltic Birch Plywood, One 12"x 12" Sheet of ½" Birch Plywood*

The top is held flat by breadboard ends that are pinned in place. You'll find details on page 60 that talks about the merits of pinned breadboard ends.

Written by: Erich Lage; Project Design: Chris Fitch

Trestle Table & Benches

This project has a casual, contemporary air to it — like a fancy picnic table for your dining room. But there are tried and true historical techniques involved in its making.

A kitchen or dining room adorned with a trestle table and benches for seating adds an air of relaxation to the room. As you see in the main photo this version has a generously sized top that's up to whatever task is at hand — be it a meal to be shared with family or friends, or maybe it's the parts of a school project that needs to be spread out for clarity. As for the long, low, and inviting benches, they throw out any stuffy, introverted notions while sliding you right up to your neighbor — well hello there.

SERIOUS FUN. While it's a fun project, there's nothing flippant about the way it's built. Note that the top is bound by breadboard ends, ensuring the surface will stay flat for a long time. Instead of the traditional trestle assembly of a post connecting to the feet and crossbar, Chris put on his creative cap and came up with the torso-like shape that adds some whimsy to the project. Red oak is the wood of choice for the table and bench. Once you start building the table you'll notice there's some subtle scaling of material thickness going on here. We'll chat about that as we go — it's time to head to the shop.

◄ The legs, torso, and crossbar (on top of the torso) make up the parts called the trestle. The trestle is an attractive and sturdy end for the table and bench.

Illustrations: Dirk Ver Steeg

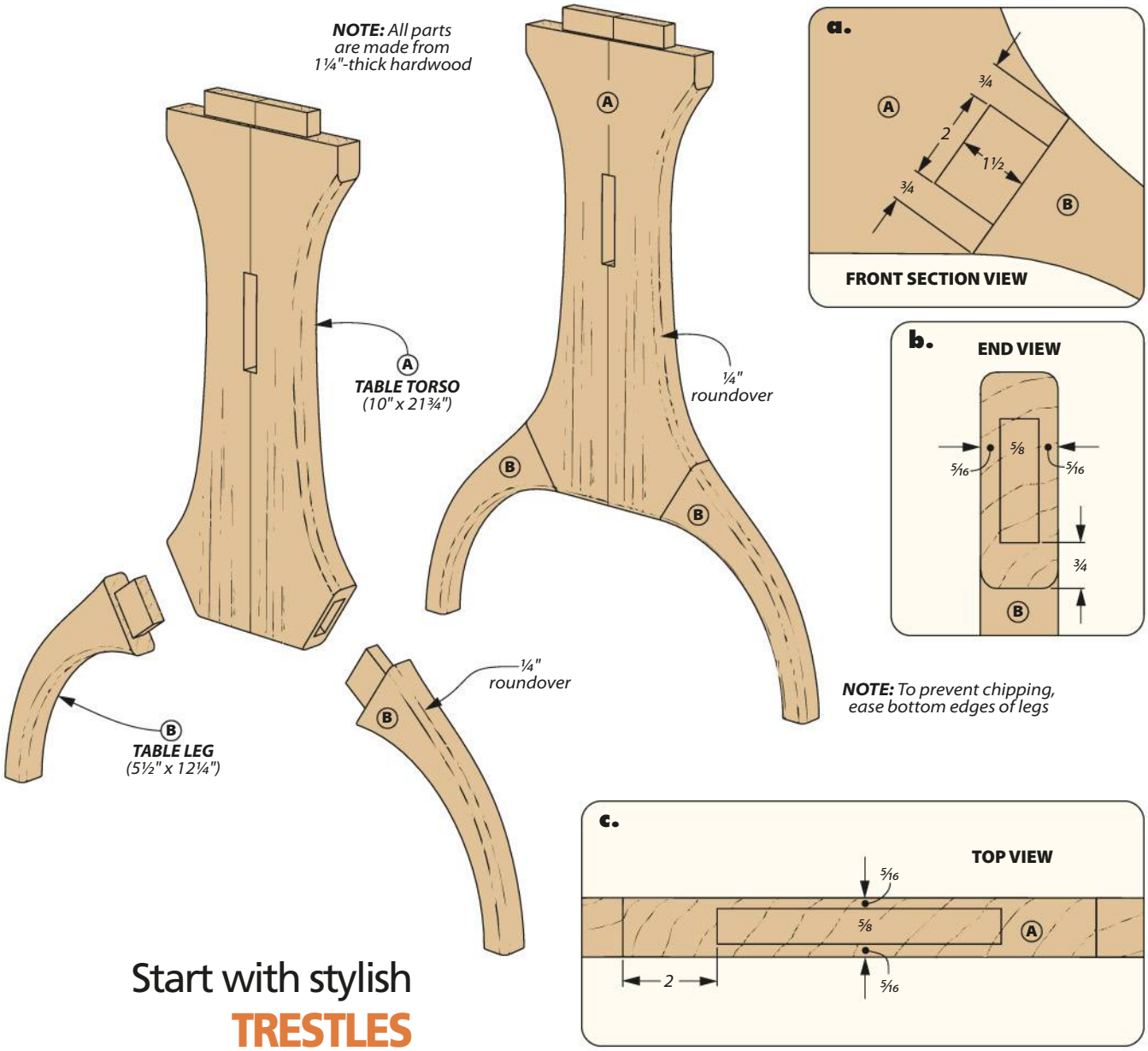

Start with stylish TRESTLES

We'll start from the ground up on this project — that means beginning with the leg assembly. It's the part referred to as the trestle. The term is borrowed from the world of structural engineering and has origins in the Middle Ages. The trestles, combined with the stretcher (you'll make it shortly) that ties them together, make for a stable base for the top, leaving plenty of room for the benches and feet underneath.

PATTERNS. If you go online to *Woodsmith.com/278* you'll find torso and leg patterns for both the table and benches. The patterns are handy when dealing with the curves of those parts. First, glue up the blanks for the table torso.

While the torsos are drying I decided to cut the tenons on the square leg blanks as shown in Figure 1 on the next page. While normally you would cut the mortises first, I chose doing it in this manner to allow me to create the profile of the leg and torso assembly in one smooth path.

When the clamps come off the torso blank, and the glue lines are scraped clean, the first order of business is to make the angled cuts on the bottom edges where the mortises for the legs reside.

SIMPLE SLED. Figure 2 shows these cuts being made on the blank with the aid of a sled. The sled is reminiscent of tapering jigs that are custom-made for a specific workpiece. There are two cleats that cradle the blank at the proper angle for the cut. To cut the opposite side, flip and spin the blank.

With some minor modification the sled will work on the bench torso parts as well, so set it aside until that time. Now you can focus on making the mortises.

GO 2 Online Extras

For full-sized patterns for table torso and legs, go to: Woodsmith.com/278

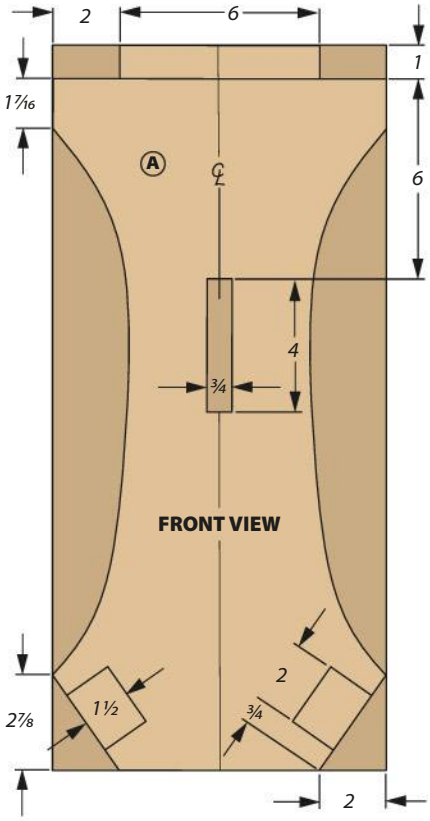

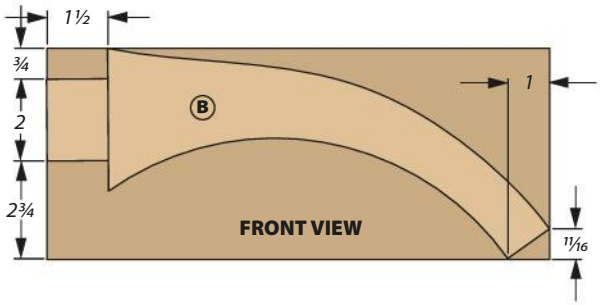

MORTISES. Figure 3 below shows one way to make the mortises. It involves using my doweling jig that, to be honest, has sat on the shelf far too long. First, draw the mortise on the edge of the workpiece, then drill a series of overlapping holes. The waste that remains along the walls and in the corners is removed with your favorite chisel. A trip to the table saw to make the centered tenon for the crossbar is in order. This leaves you with one remaining thing to do at the drill press — make and square up the through mortise in the upper center for the tenon of the stretcher (Front View at left).

SHAPING THE PARTS. Before gluing up the legs and torso, I roughed out the shapes at the band saw. Figure 4 shows this in action. Stay on the waste side of the line while doing this. Band clamps are the ideal tool to use for gluing the legs to the torso. Then use rasps, files, and sandpaper to blend the transitions between the legs and torso.

SHAPING THE LEGS & TORSO

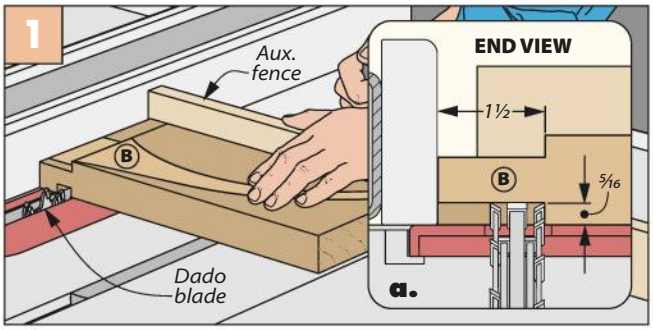

Legs First. Before shaping the table legs you'll need to cut the tenons that join to the torso at the table saw.

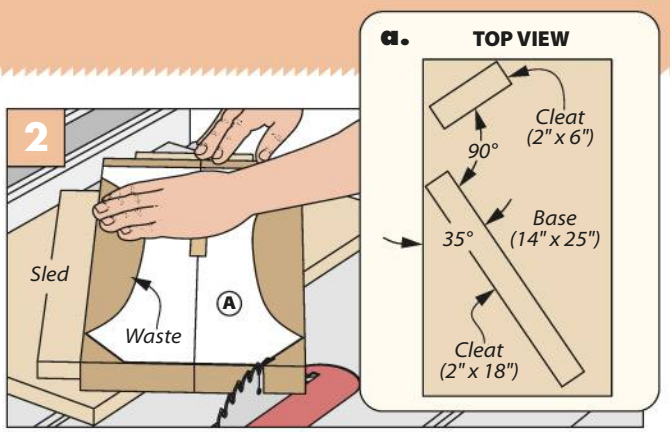

A Supporting Sled. Cutting the angled shoulders for the legs is easy to do when you use the sled shown here.

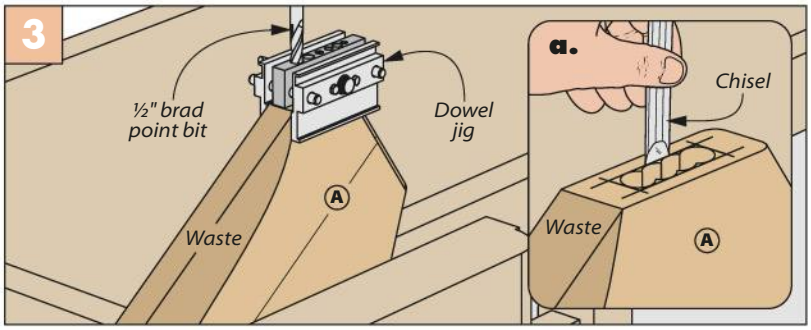

Mortises for the Legs. My doweling jig guided my drill when removing the waste in the torso mortises. A sharp chisel did the rest.

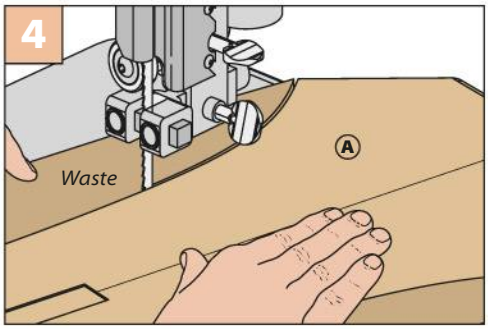

Band Saw Last. Stay on the waste side of the line when roughing out the torso.

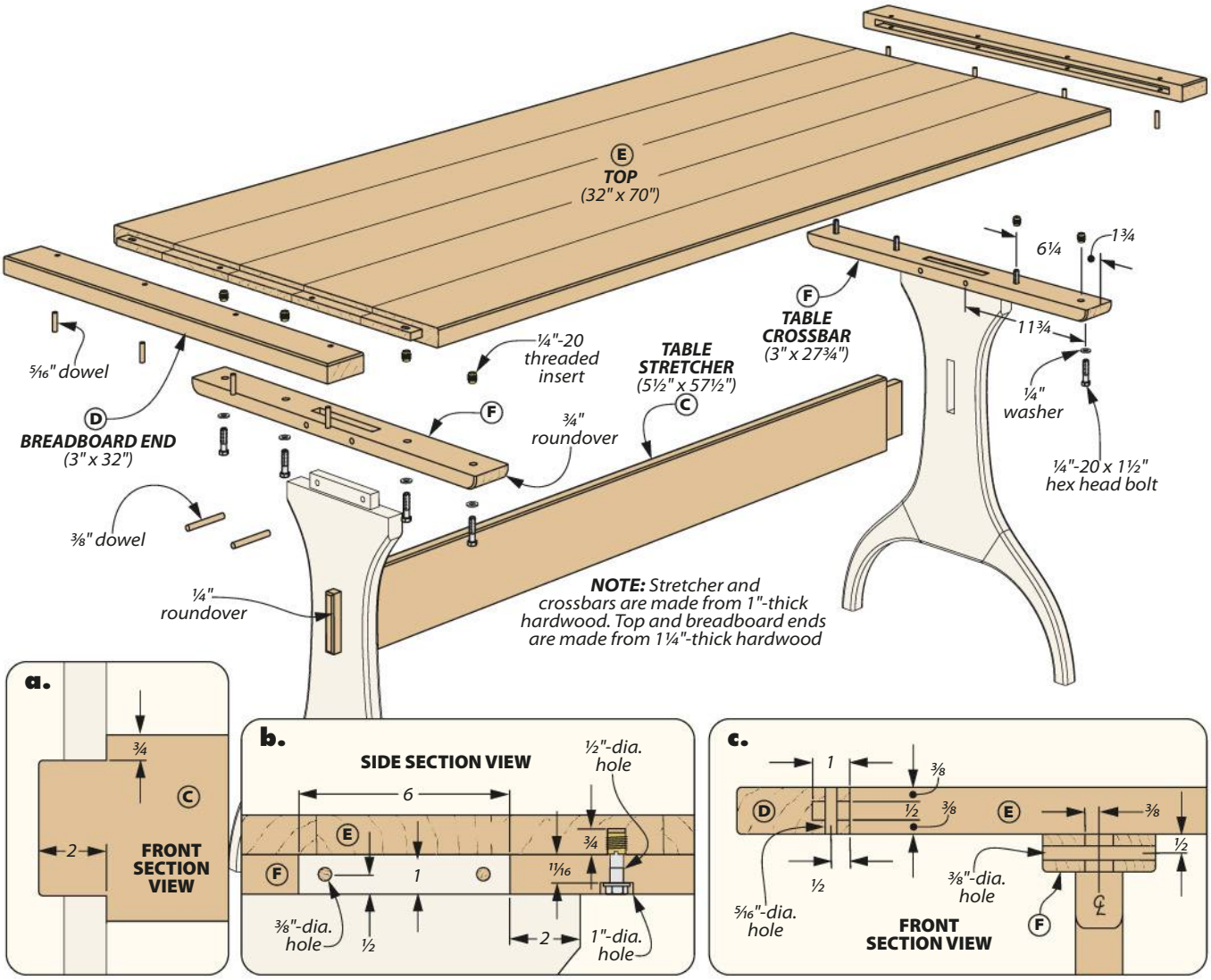

Complete the table with a STRETCHER & TOP

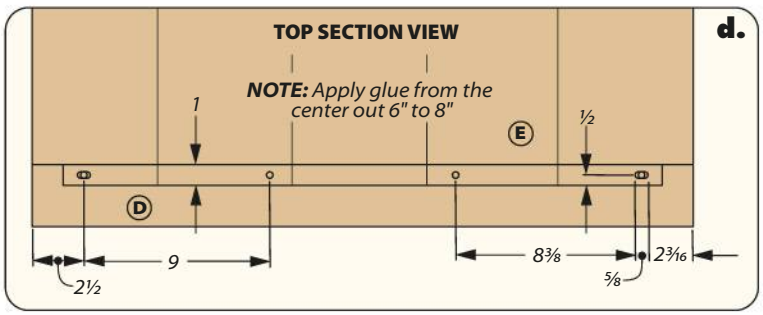

Next on the docket is the stretcher that I mentioned earlier. It's the member that will bring the trestles together forming the base assembly. Then we'll focus on making the top.

A LONG BOARD. The stretcher is the simplest part of the project, but that doesn't diminish its importance. When it's in place it will add rigidity to the table. Detail 'a' above shows how the tenon on the ends fit into the center slot of the trestles. Figure 1 on the next page shows how to cut said tenons at the table saw. When the cutting is done you'll need to round over the exposed edges on the body of the board and ends of the tenons.

THE TOP

We're going make the breadboard ends next — first glue up the boards for the top so it will be ready to work on afterwards.

BREADBOARD ENDS. The breadboard ends we're making here are closed. That means you won't see the tenons of the top on the edges. You'll have to make a stopped mortise on the inside edge of the breadboard end. Figure 2 shows how to set up your router table to make that happen. Figure 'd' above shows where to drill the holes for the pins that attach the ends to the tenons on table. Once the

holes are drilled it's time to start working on the top.

When you've cleared away the clamps and tidied up the surface of the top you can attend to the joinery task — making tenons on the ends. Figure 3 shows you the easiest way to make the tenons. After the router is done screaming, spend a little time quietly trimming the ends (Figure 3b).

DRAWBORE BASICS. To firmly attach the breadboard ends to the top you'll employ drawboring to hold it in place. In drawboring, the hole in the tenon is drilled separately and is slightly offset toward the shoulder (Figure 4a). To do this accurately you'll need to slide the breadboard end over the tenon. Then mark the location of each hole using a brad-point bit to make a dimple in the surface of the tenon. After all the locations are marked, remove the end and drill the slots and holes with the bit set slightly closer to the shoulder of the tenon.

To install the breadboard ends apply glue to the center of the tenons (detail 'd') and drive the pins through both workpieces. Now you can trim the pins flush (Figure 4b).

CROSSBARS. After cutting the boards to size, lay out the center mortise for the tenon of the trestle, the hole locations for the pins, as well as the counterbored shankholes for the mounting hardware. These dimensions are shown on the previous page (main drawing and detail 'b').

After drilling all the holes and squaring the large through mortise for the tenons, rout the roundover on the ends. Once you've glued the crossbars in place, drill through the tenons to make way for the pins. Lastly, glue the stretcher to the trestles. We'll walk through attaching the top to the base when we've made the bench parts (the technique is same for both).

STRETCHER & TOP DETAILS

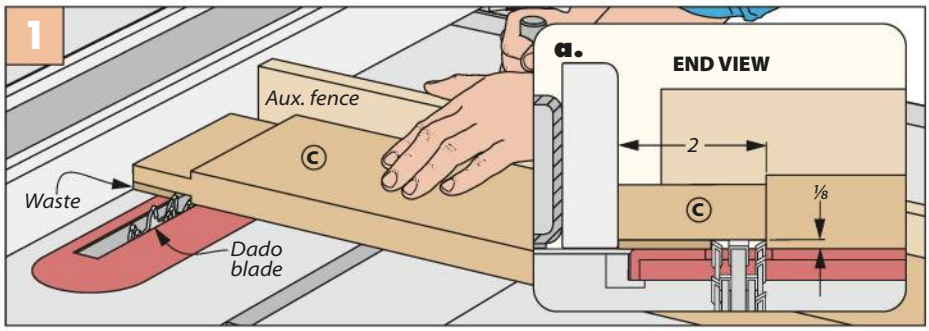

Stretcher Tenons. Use your rip fence as a stop to establish the shoulders of the tenons. The board is long so you might need to support it with an outfeed roller.

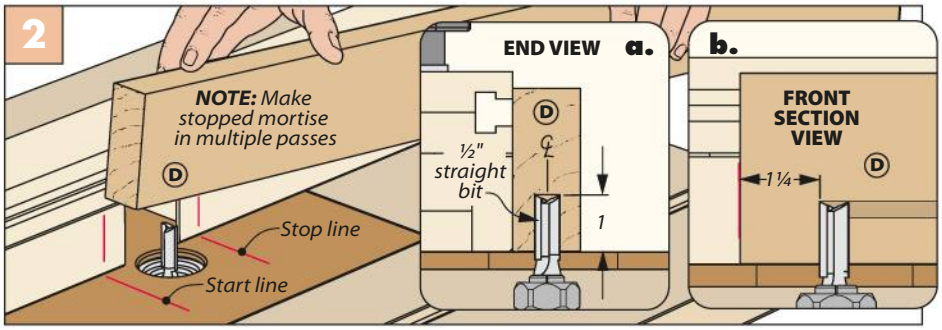

A Stopped Mortise. Start and stop points drawn on the fence of your router table are an easy way to make the long stopped mortises in the breadboard ends.

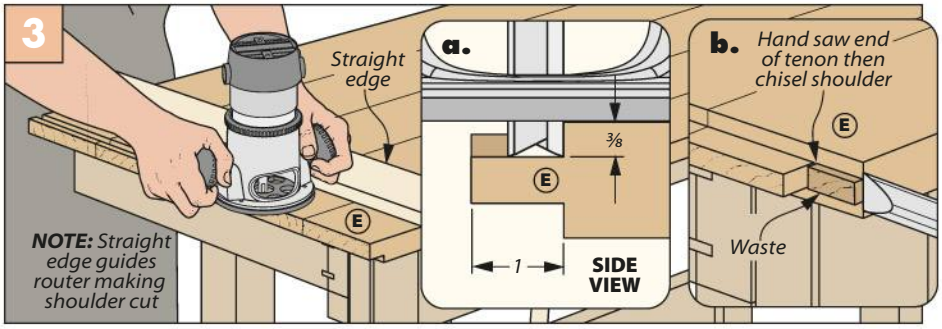

Tenons on the Top. A straight edge, a straight bit, and your hand-held router are the ideal trio for making the tenon on each end of the top.

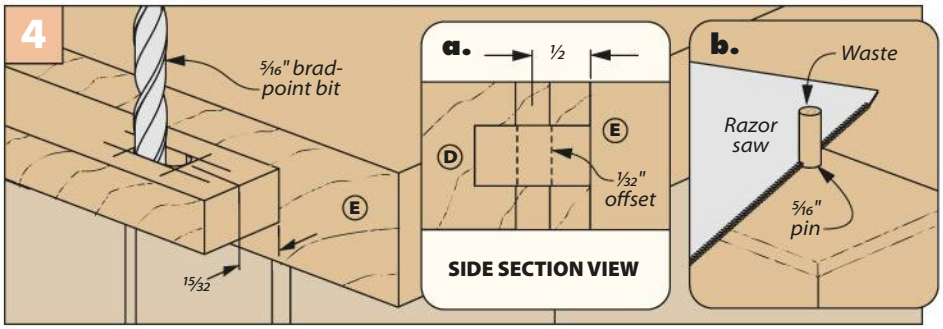

Room to Move. Drill the elongated holes in the tenons for the pin to allow the top to move with seasonal humidity changes. Trim the pins flush once they're installed.

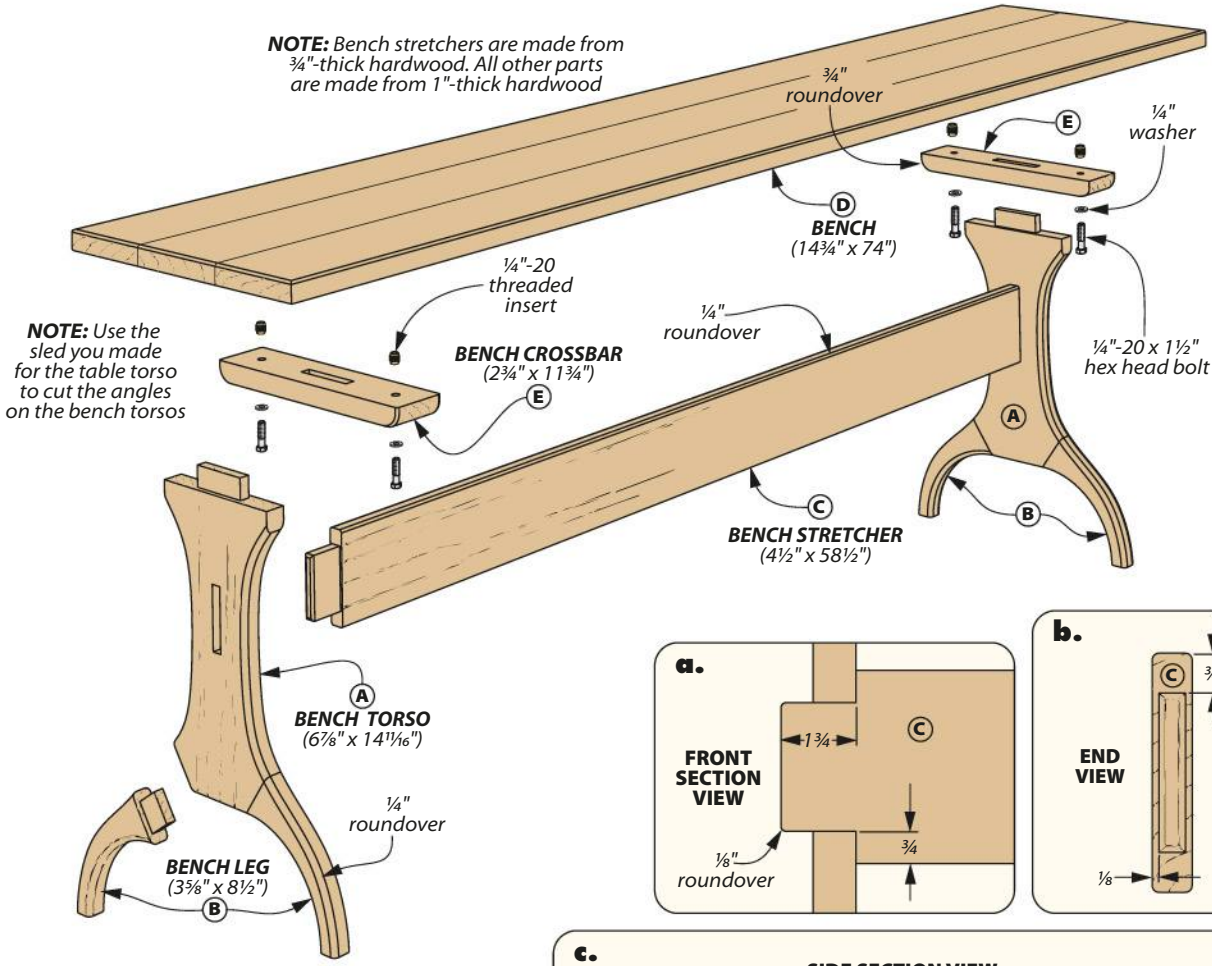

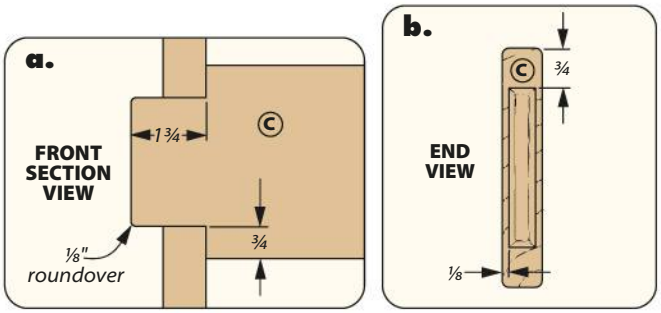

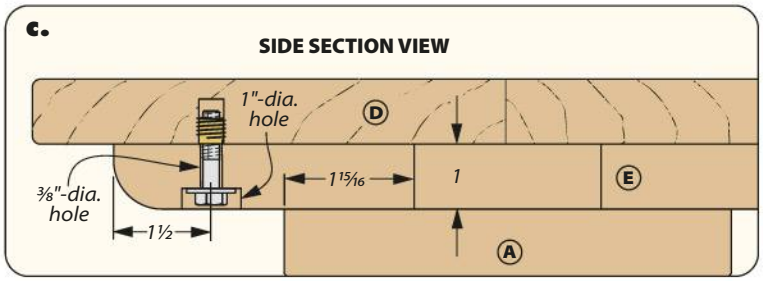

Add a well-made BENCH

Once you start making the benches there's going to be a little dejà vu in the air. As you see in the main drawing above, the trestle, although smaller, has an identical profile to its big brother on the table. The size and thickness of material employed separate the two. The same is true for the stretchers. The bench, being much narrower than the top, doesn't have breadboard ends to deal with. As you did with the table, a good place to start making sawdust is with the trestle parts: the legs and torso.

LEGS. The legs, shown in the Front View on the next page are machined like the legs on the table — tenons at the table saw, then the profile is roughly shaped with your jig saw (the shape will be fine-tuned once it's glued to the torso).

SLED JIG. As I mentioned back when we shaped the torso for the table, you can use the same sled here. You'll have to trim a few inches off the front of the sled for this smaller version to fit, then you're good to go (the cleat position is fine as is).

After laying out the location of the mortises for the legs (detail 'd') it's an encore performance for your doweling jig. Once the mortises are cleaned up with a chisel and the rest of the joinery is done (Front View on next

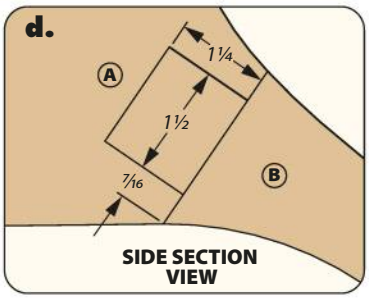

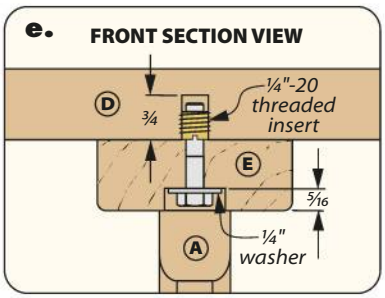

page) you can glue the legs in place. Then spend some quiet time shaping the four trestles.

Details 'a' and 'b' on the previous page show the work you need to do on the stretchers. The crossbars are next on the list, then you can glue all the parts of the base assembly together. Gluing up the boards for the benches is what you'll do next — then it's time to bring it all together.

ATTACH THE TOP & BENCHES

Detail 'c' on the previous page, and detail 'b' on page 38 show the hardware required to attach the top and benches to their respective bases. Here we'll attach a bench top to its base, then you can repeat the process for the other bench and the top.

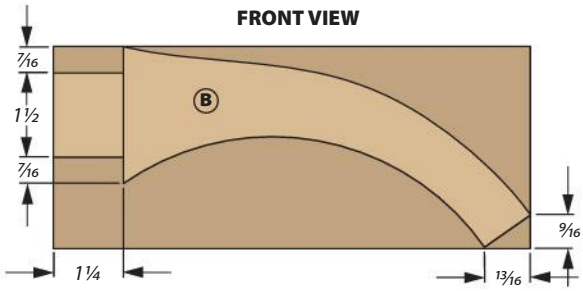

Start by laying the bench face down and center the base assembly on it in both directions. Mark the location for the threaded inserts through the crossbar holes. Then set aside the base assembly and install the threaded inserts. Now you can bolt the two together. Once the finish is dry, you can move the table and bench to the dining room and order pizzas for all. W

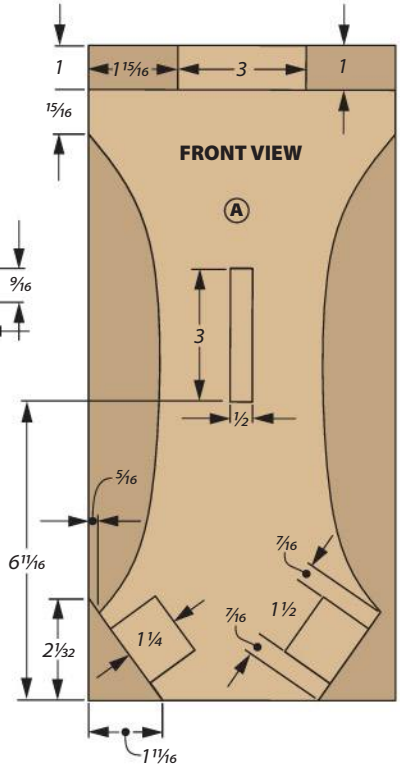

Materials, Supplies & Cutting Diagram

Table (1)

A	Table Torsos (2)	1¼ x 10 - 21¾	**E**	Top (1)	1¼ x 32 - 70	•	(8) ¼"- 20 Threaded Inserts
B	Table Legs (4)	1¼ x 5½ - 12¼	**F**	Table Crossbars (2)	1 x 3 - 27¾	•	(8) ¼" x 1½"- 20 Hex Bolts
C	Table Stretcher (1)	1 x 5½ - 57½	•	(8) 5/16"-dia. x 1¼" Dowels		•	(8) ¼" Washers
D	Breadboard Ends (2)	1¼ x 3 - 32	•	(4) ⅜"-dia. x 3" Dowels			

1¼"x 7" - 72" Oak (Five boards @ 5.3 Bd. Ft. each)

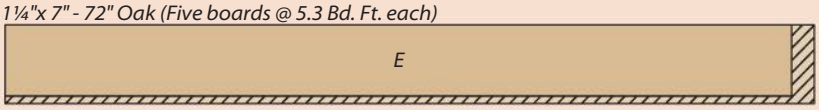

1¼"x 6" - 36" Oak (Four boards @ 2.3 Bd. Ft. each)

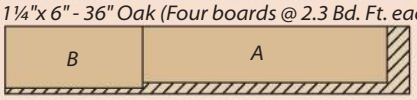

1¼"x 6½" - 33" Oak (2.2 Bd. Ft.)

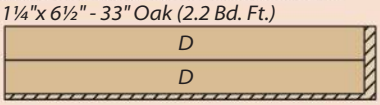

1" x 6½" - 86" Oak (4.9 Bd. Ft.)

Benches (2)

A	Bench Torsos (4)	1 x 6⅞ - 14 11/16	**E**	Bench Crossbars (4)	1 x 2¾ - 11¾
B	Bench Legs (8)	1 x 3⅝ - 8½	•	(8) ¼"- 20 Threaded Inserts	
C	Bench Stretchers (2)	¾ x 4½ - 58½	•	(8) ¼" x 1¼"- 20 Hex Bolts	
D	Benches (2)	1 x 14¾ - 74	•	(8) ¼" Washers	

1"x 5½" - 78" Oak (Six boards @ 3.7 Bd. Ft. each)

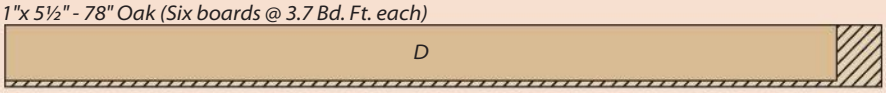

¾"x 5" - 60" Oak (Two boards @ 2.1 Bd. Ft. each)

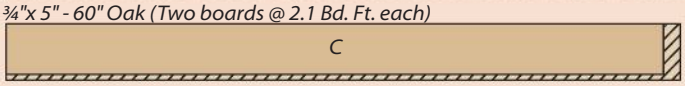

1"x 8" - 63" Oak (Two boards @ 4.4 Bd. Ft. each)

Saw Sled Duo

A saw sled is the perfect way to ensure precise and safe crosscuts when working at the table saw, and the pair you see here can do all that and more.

Although the table saw is primarily a ripping tool, it's hard to beat its precision when it comes to crosscuts as well. If I need a perfect crosscut, whether that's 90°, 45°, or somewhere in between, then chances are I'm going to cut it at the table saw. But, miter gauges can be notoriously fiddly, and even then they don't always provide the kind of support I want for larger workpieces. That's why when I need to make a high-quality crosscut I turn to a table saw sled.

T-TRACK. In our shop here at *Woodsmith*, we've accumulated several shop-made sleds over the years, and we get plenty of use out of them. However, there's one thing that makes these sleds stand out: the T-track. Not only does this allow for the use of hold-downs to keep workpieces secure throughout the cut, but it also accepts the T-bolts used to attach the adjustable miter arms on the panel sleds, making miters at all angles a breeze.

PANEL & CROSSCUT. In this project you'll find the plans for two sleds. First up is the panel sled, which you can see at right. This one features those adjustable miter arms for angled cuts, and, when the arms are removed, it can cut workpieces up to 22½" wide. The second is the one in the photo below. This is a dedicated crosscut sled, with a narrower body to cut down on weight and make it easier to store. We built these from Baltic birch plywood for its stability and pleasant, laminated edges. These sleds can be made in a weekend from just one 4' x 8' sheet of plywood, and you might be surprised at how much use you'll get out of a good table saw sled.

◄ At the end of this article you'll find a design for a smaller sled, which offers great crosscutting capability with less weight and a smaller footprint.

Written by: Rob Petrie; Project Design: Chris Fitch

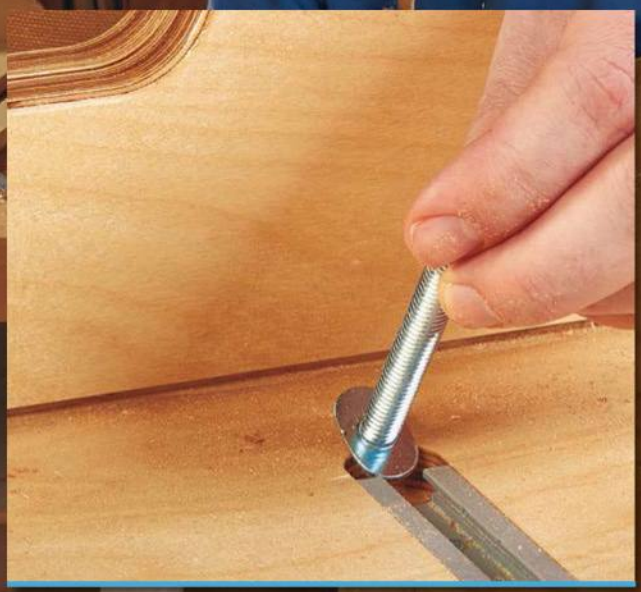

▲ The slots for the T-track end in a radius, making it quick to slide in the T-bolts for the fences and hold-downs.

▲ The miter fences and the extruded aluminum hold-downs are easy to adjust on the fly, using star knobs threaded onto T-bolts.

Illustrations: Dirk Ver Steeg

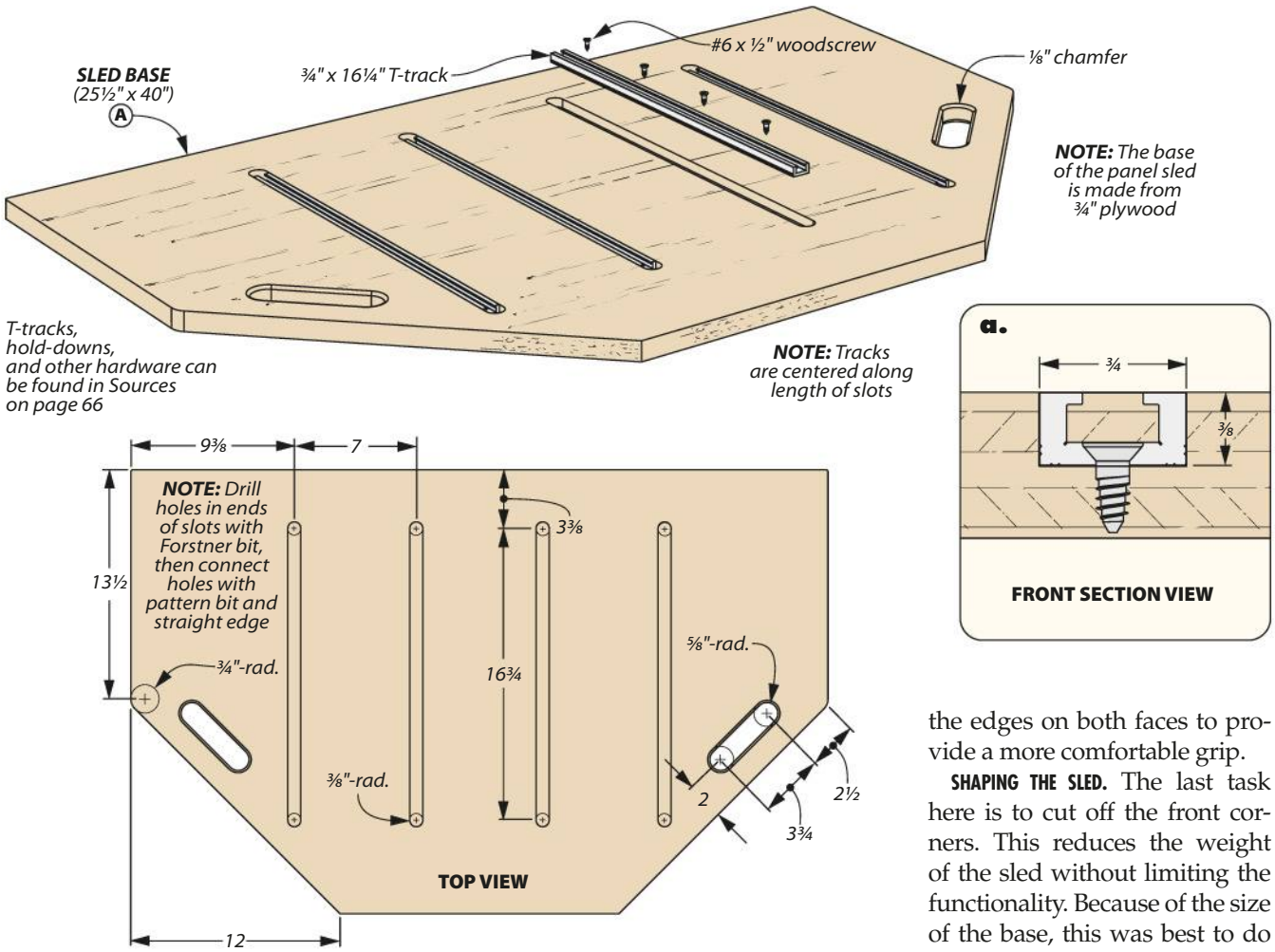

Making a Stable **SLED**

Both table saw sleds follow a similar procedure, but we'll be looking at the more complex panel sled first. The action on the panel sled takes place on the base, making that the natural starting point. I made my sleds from plywood (Baltic birch specifically), and after finding a sufficiently large chunk and cutting it to size, I marked the layout across it, which you can see illustrated above.

LAYOUT. There are three important elements to note here. First, the slots for the T-tracks, followed by the handholds, then the front corners. You can see where these are located above.

T-SLOTS. When it came to the actual work, I began at the slots for the T-track (detail 'a'). With the slots laid out, I first established the ends with a Forstner bit. I left these ends radiused, as it would give me a bit of room to slide the T-bolts in after installing the track.

Now that the ends were drilled, I connected them by routing with a pattern bit, using a straightedge to guide the router.

HANDHOLDS. Second on the sled base is the pair of slots that serve as handholds. As with the T-track slots, I initially drilled the ends with a Forstner bit.

Like the last slots we made, I would be routing the sides of the handholds for a flat edge. However, I removed most of the waste first with a jig saw. After finshing the sides, I ran a chamfer around the edges on both faces to provide a more comfortable grip.

SHAPING THE SLED. The last task here is to cut off the front corners. This reduces the weight of the sled without limiting the functionality. Because of the size of the base, this was best to do with a jig saw at first, finishing up the edge with a pattern bit and straightedge once more. To get the radius on the corners, I marked them out with a compass, then knocked them down with a sanding block.

T-TRACKS. With the base shaped, it's time to install the first bits of hardware: the T-tracks. In order to install the T-track, you'll need to drill clearance holes. The track I used had a V-groove down the center to make it easy to align the drill bit.

FENCES & ARMS

The base is now prepared for the upper parts. First will be a pair of fences to keep the workpiece on the sled and perpendicular to the blade. Second is the pair of miter arms mounted on T-bolts.

FENCES. To kick off the fences, you'll first need to glue up each

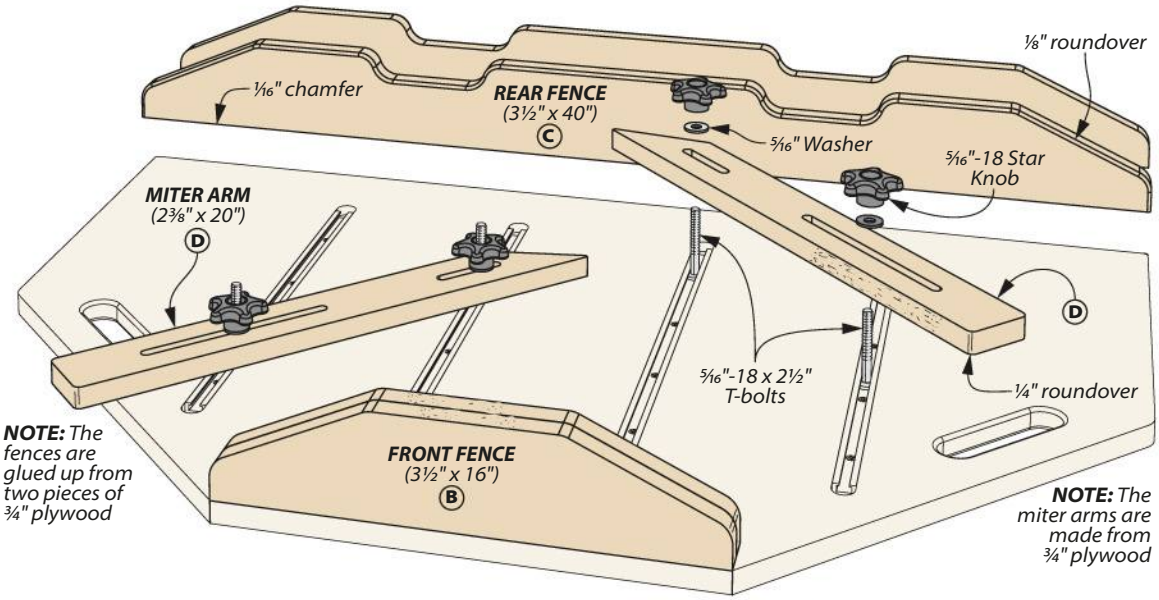

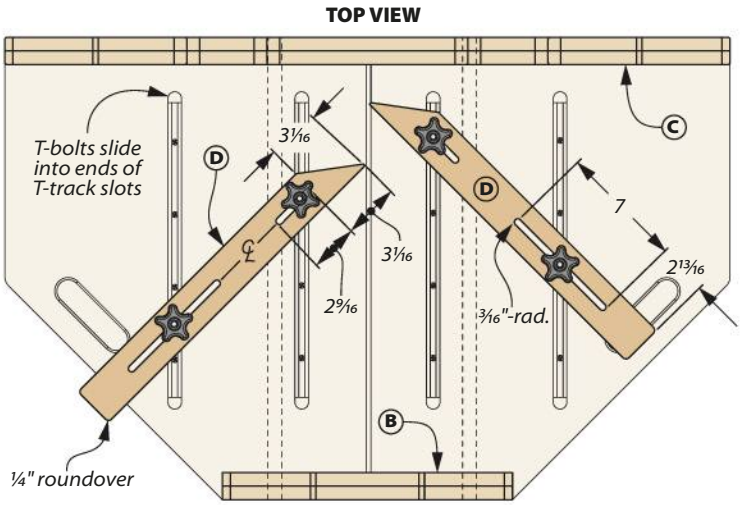

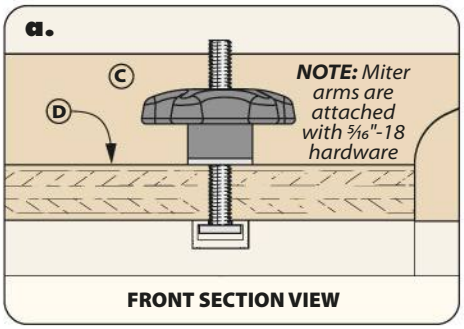

one from two pieces of plywood. While the profiles of these are a mostly aesthetic choice, you can see the layout I used below.

The jig saw or the band saw are good choices for rough shaping. I reached the final shape at the spindle sander, then took the rear fence over to the router table. I eased the upper edges with roundovers, then routed a slight chamfer along the inner edge for dust clearance. Finally, I glued the front fence onto the the base, but I only screwed the rear fence on for now.

MITER ARMS. The last pieces are the miter arms. After sizing them, I laid out the slots that the bolts go through. I drilled out the ends of the slots and finished them at the router table as I did on the base. To complete the arms, I mitered the ends at the table saw and sanded radii onto the opposite corners at the edge sander.

The arms are attached by slipping the T-bolts into the tracks and slotting the arms overtop. The knobs thread down to hold them in place. On page 66, you'll find our source for a pair of hold-downs that work the same way.

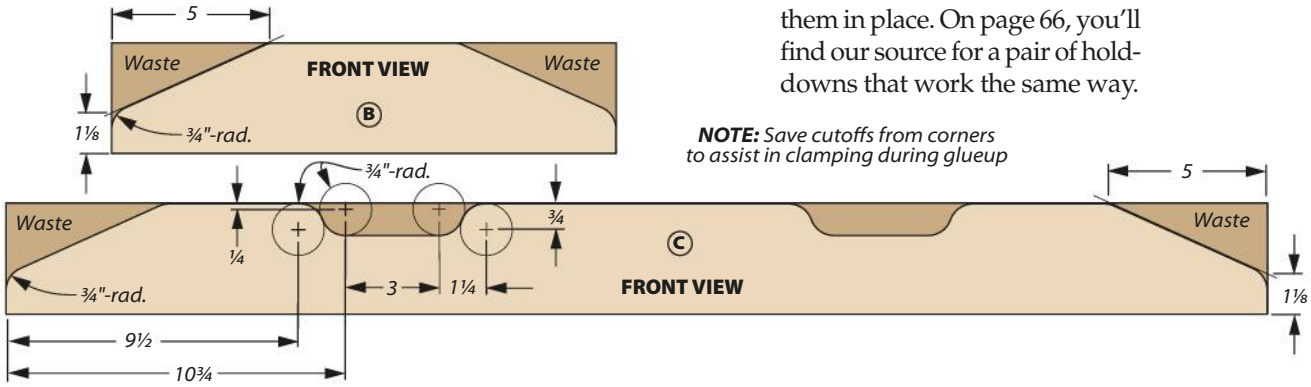

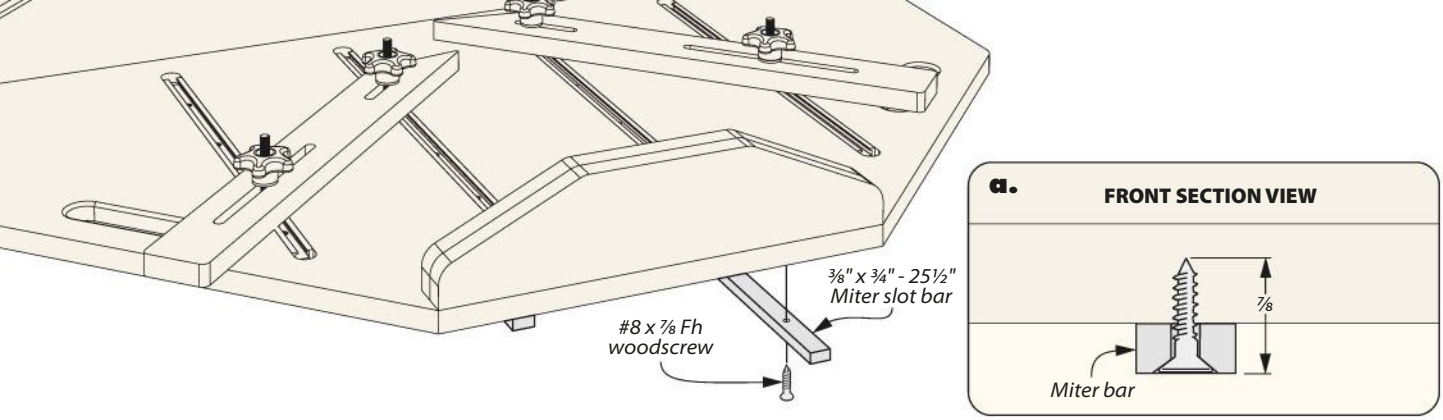

Adding the MITER BARS

At this point, the panel sled is nearly finished, but there's one more important piece of hardware to attach: the miter bars. These are simply screwed in place, but their alignment is extremely important — they need to be perpendicular to the rear fence to ensure a 90° cut.

ALIGNING THE MITER BARS. To be sure the miter bars would be perpendicular, I used the technique you see below. I started by getting a couple of thin shims from my scrap bin that would fit in the miter slots of my table saw. Then I placed the miter bars overtop, setting their ends flush to the back edge of the table. I lowered the sled onto them, keeping the rear fence flush to the edge as well.

Use a straightedge to check the position of the rear fence against the table. Once that's perfect, test the motion of the sled to make sure the miter bars are sliding freely (meaning they're parallel). Adjust until the sled slides easily and base is flush to the table.

To secure the bars, I flipped the sled over onto my workbench with them taped on. I drilled the pilot holes, then drove in the screws (detail 'a').

BLADE KERF. Last comes the blade kerf. To make this, I set my sled on the table saw (bars in slots) and made a cut (Figure 2). One pass through is all it takes to create a zero-clearance kerf. Finally, I used that slot to make sure the rear fence would be square to the blade. Since it's just screwed in place, I could adjust it as necessary for a perfect 90° angle.

ADDING THE MITER BARS

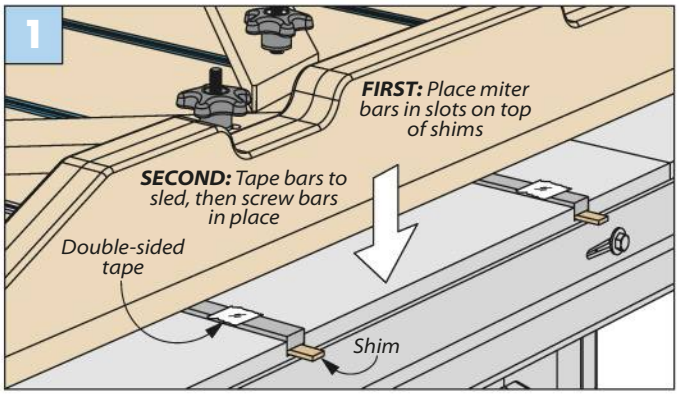

Miter Locations. Use your table saw's miter slots to locate the bars. Use a straightedge to keep them flush to the base.

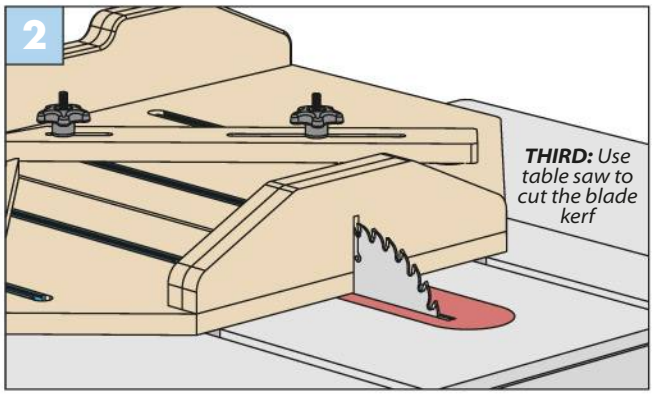

Blade Kerf. Once your miter bars are attached, set your sled on the table saw and make a cut to create the kerf.

Panel Sled Materials & Supplies

A	Sled Base (1)	3/4 ply. - 25 1/2 x 40	
B	Front Fence (2)	3/4 ply. - 3 1/2 x 16	
C	Rear Fence (2)	3/4 ply. - 3 1/2 x 40	
D	Miter Arms (2)	3/4 ply. - 2 3/8 x 20	

- (4) 3/4" x 16 1/4" Aluminum T-track
- (12) #6 x 1/2" Fh Woodscrews
- (6) 5/16"-18 x 2 1/2" T-bolts
- (6) 5/16"-18 x 2 1/4" Star Knobs
- (2) T-track Hold-downs
- (2) 3/8" x 3/4" - 25 3/8" Miter Bar
- (10) #8 x 7/8" Fh Woodscrews

ALSO NEEDED: *One 4' x 4' sheet of Baltic birch plywood*

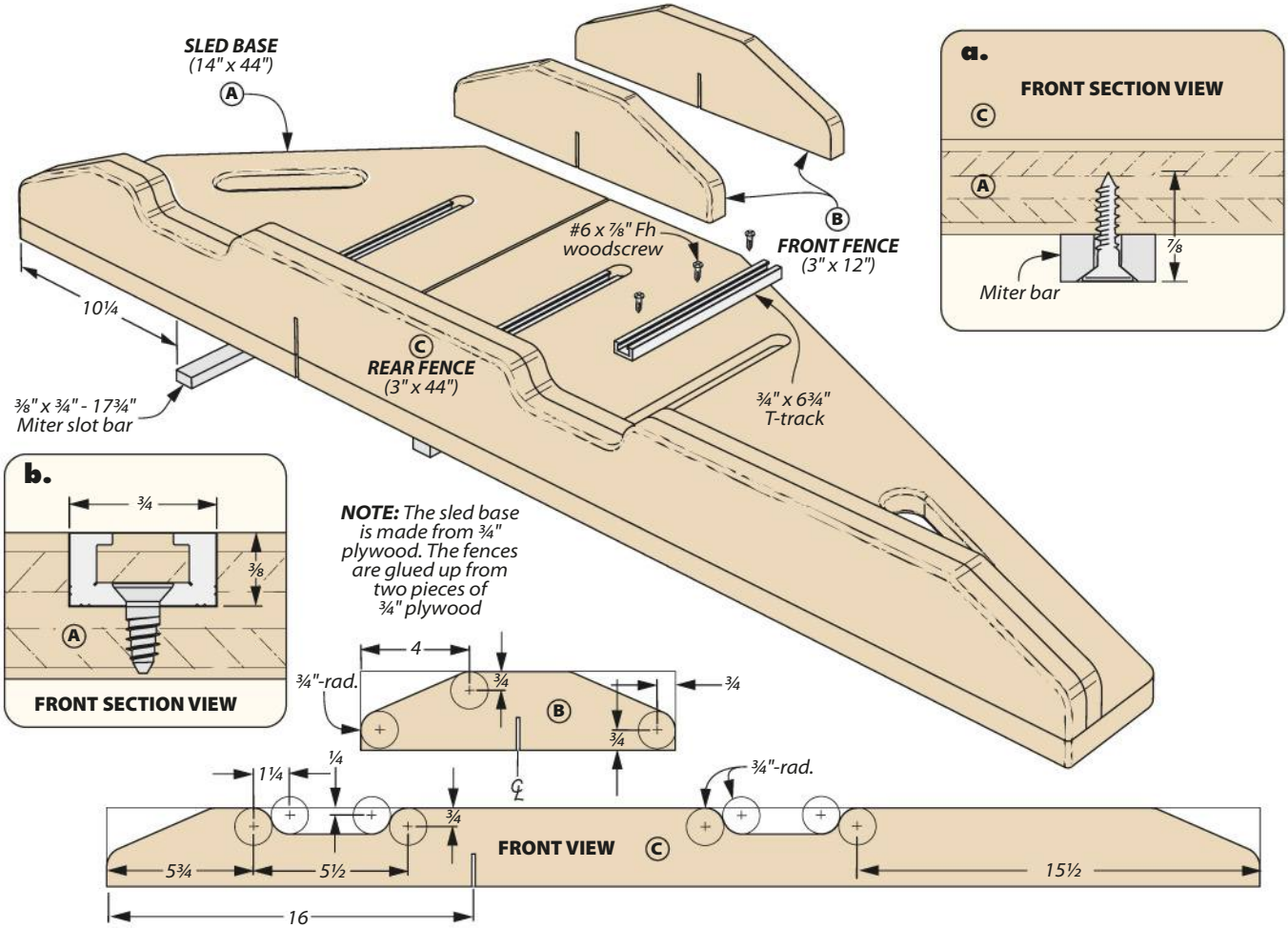

Crosscutting SLED

The panel sled isn't the only design we included. The one shown here is a smaller, simpler version. This one is great to have around for everyday crosscuts, as it takes up less space and is easier to haul around as needed.

A NARROW SLED. There are a few key differences to note here. First, it has a smaller capacity, being able to handle pieces 11" wide and under — still plenty for most crosscuts. Additionally, the sled is asymmetrical, allowing you to attach a stop on the right side for repeated cuts up to 29" from the blade. Otherwise, building this sled is similar to the panel sled, and with this duo, your table saw will feel like a high-performance, crosscutting machine. W

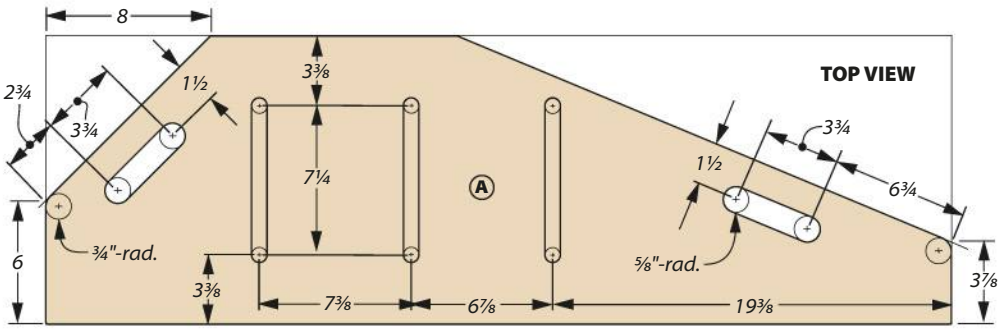

Crosscutting Sled Materials & Supplies

A	Sled Base (1)	¾ ply. - 14 x 44
B	Front Fence (2)	¾ ply. - 3 x 12
C	Rear Fence (2)	¾ ply. - 3 x 44

- (3) ¾" x 6¾" Aluminum T-track
- (9) #6 x ½" Fh Woodscrews
- (2) T-track Hold-downs
- (2) ⅜" x ¾" - 14" Miter Bar
- (8) #8 x ⅞" Fh Woodscrews

ALSO NEEDED:
One 4' x 4' sheet of Baltic birch plywood

Written by: Erich Lage; Project Design: Dillon Baker

Multipurpose Floor Mirror

Mirror, mirror on the wall — why don't you give me the complete view like the full-length floor version shown here? This sturdy beauty allows you to make a quick spot-check of your entire outfit.

Floor mirrors add more to their environment than access to your handsome reflection. The large, long mirror also enhances the space by bouncing out the light of the room and making the space feel bigger. But the merits of this mirror don't stop there.

The angled back assembly supports and tilts the mirror frame, allowing you to make a quick head to toe examination of your outfit. Compare this to traditional cheval mirrors — which are only as stable as the design and quality of the tilting hardware used. Wall mirrors are nice but they're a commitment that's not easily moved. Although this is a free-standing mirror, the back assembly adds utility as well as stability, making the piece quite stable and one that won't be easily knocked over.

ANATOMY. Both the support and mirror frame are made with white oak, a beautiful mostly straight-grained wood that I've always enjoyed working with. Also all the parts of the mirror are 1"-thick — to me that little extra beyond standard board thickness of ¾" scales this piece of furniture nicely.

The mirror is also a multi-tasker as you see in the two photos below. At the top of the left photo, there's a hole large enough for several hangers of tomorrow's outfit ready to go. Note the roundover along the back edge; paired with the rounded corners they combine to make a snag-free environment. The right photo shows the leather covered slipper tray that adds structural stability to the mirror. Convinced? Let's head to the shop.

▲ Are you wanting to try on several different outfits? The generously sized hanger hole in the top rail of the back assembly bar lets you keep those options close at hand.

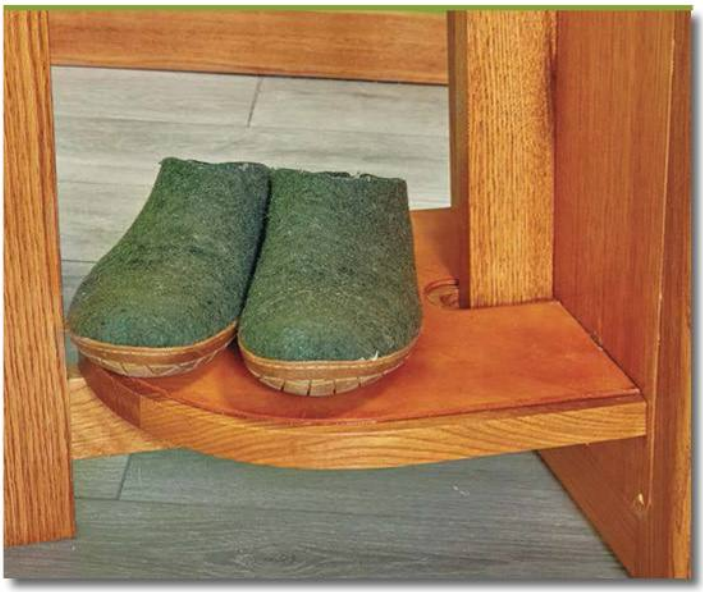

▲ The slipper tray adds stability to the mirror by tying the back assembly and the mirror frame together. It also allows you to stow away the slippers that can often be stumbled over.

Illustrations: Dirk Ver Steeg

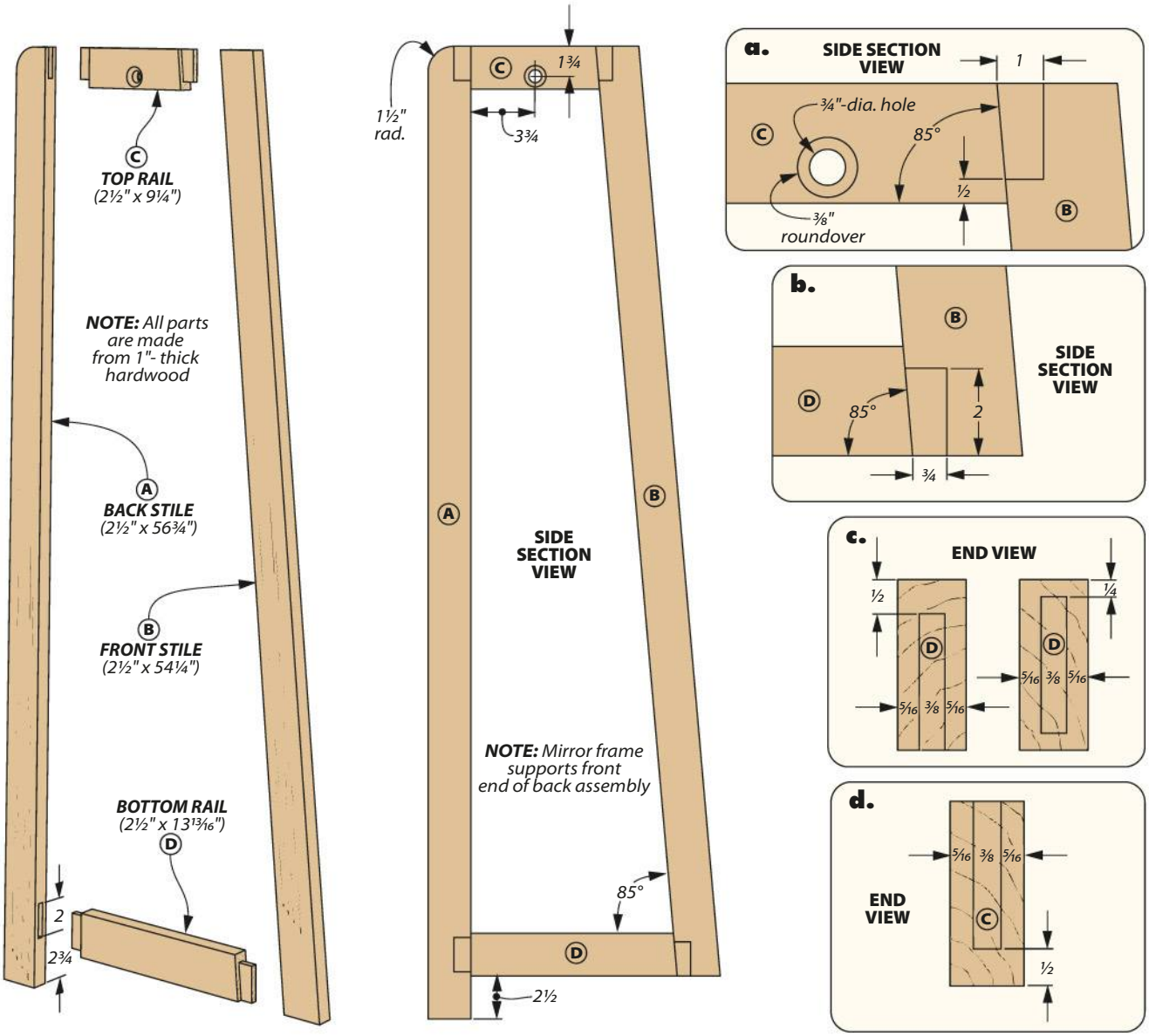

Start with the SUPPORT FRAME

The frame you see above combined with the slipper tray that's anchored to its base is the backbone that supports the mirror frame. The joinery is good old mortise and tenon.

As you see in the main drawing and details 'a' and 'b,' the mortises are in the stiles and tenons on the ends of the rails. You'll also note the front of the frame is angled. This detail pitches the angle of the mirror frame so you can get a full-length look at your outfit without having to back away from the mirror. It's a modest 5° angle.

MORTISES FIRST. Making the mortises is where to start on the frame. First we'll rip the parts to width and cut them to final length. You'll need to adjust your table saw's miter gauge to make the cuts on the ends of the front stile — leave the miter gauge set up this way, you'll need it shortly.

A Forstner bit chucked into your drill press is an easy way to make the mortises in the stiles. To accurately position them in the front stile I made the jig that's shown in Figure 1 on the next page. It's a simple jig that rests on the drill press table and has a cleat screwed to it. The cleat accounts for the angle of the stile, yet allows you to drill a mortise that's square to the rest of the frame. Figure 2 shows the jig in action while removing waste from the mortise at the top of the stile. In both instances you'll need some outfeed support to hold the stiles steady. After drilling the mortises in the back stile (no jig needed here) you can square up the mortises with a chisel.

TENONS. Since you left the miter gauge of your table saw set to

GO 2 Online Extras

For more on angled tenons go to:

Woodsmith.com/278

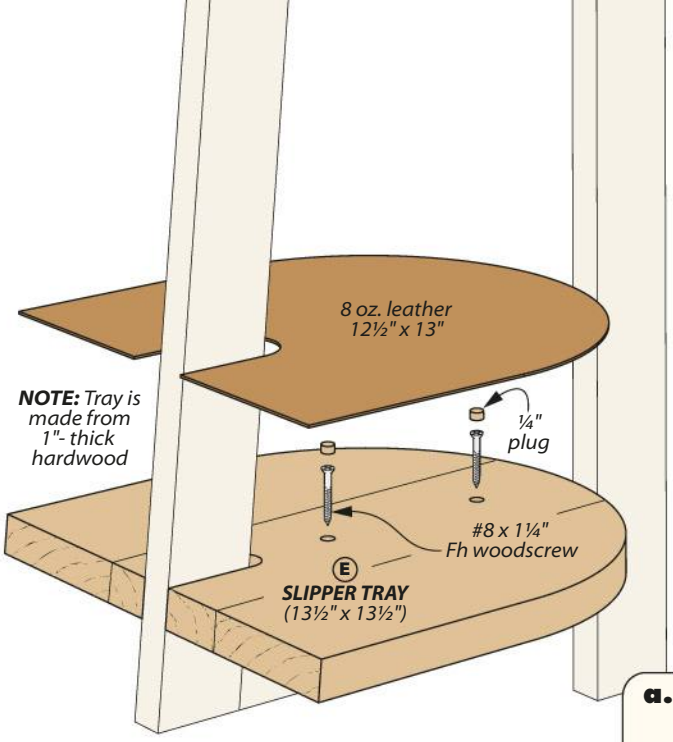

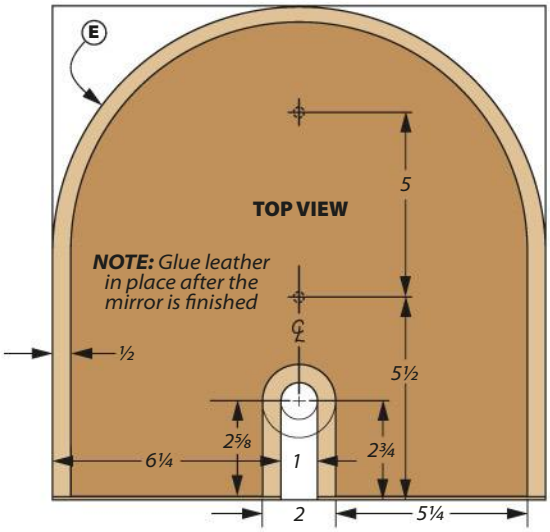

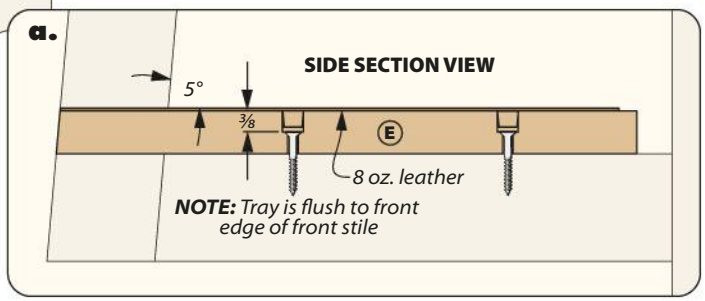

the working angle of the front of the frame, the best place to start on the rails is to cut the angled shoulders on the front ends of the top and bottom rails (details 'a' and 'b' on the previous page). You'll have to flip the miter gauge angle to do both faces. Then you can set the miter gauge back to square and attend to the tenons on the back side.

One more thing to do before gluing up the frame — you need to drill the hole in the top rail for hanging items you want close by. Then round over the opening. While you have the supplies and tools out for gluing up, you might as well add the blanks for the slipper tray since you'll be making that next.

SLIPPER TRAY

As I mentioned earlier, the slipper tray adds stability to the mirror back. Once the blank is free of the clamps you can trim it to its overall size shown in the main drawing above. Next you'll need add the bevel along the front edge that conforms to the angle of the support (detail 'a'). The Top View above shows the dimensions of the arc on the back of the tray (and the slot you need to make for the front stile).

You can fit the leather cover now. But don't glue it in place until the finish has been applied.

ANGLED MORTISES

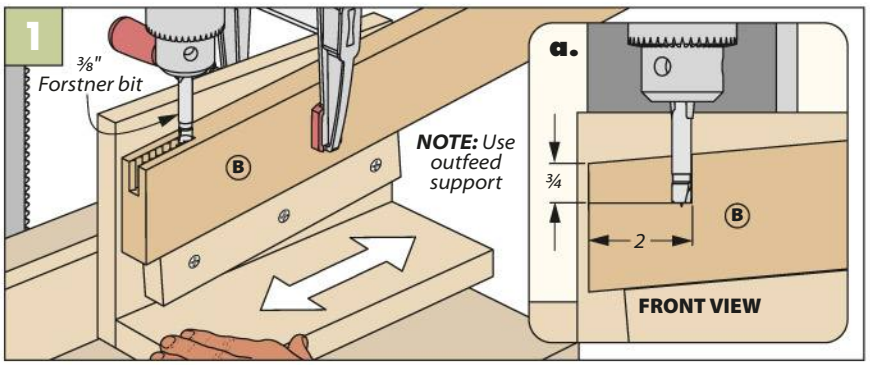

An Angled Mortise. The cleat on the jig you see above holds the front stile at the proper angle. Overlapping holes remove most of the waste in the mortise.

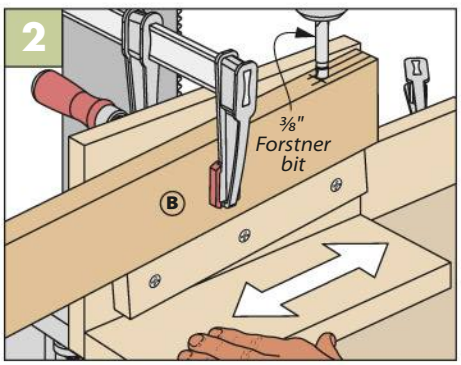

Both Ends. It's a repeat performance at the other end of the front stile.

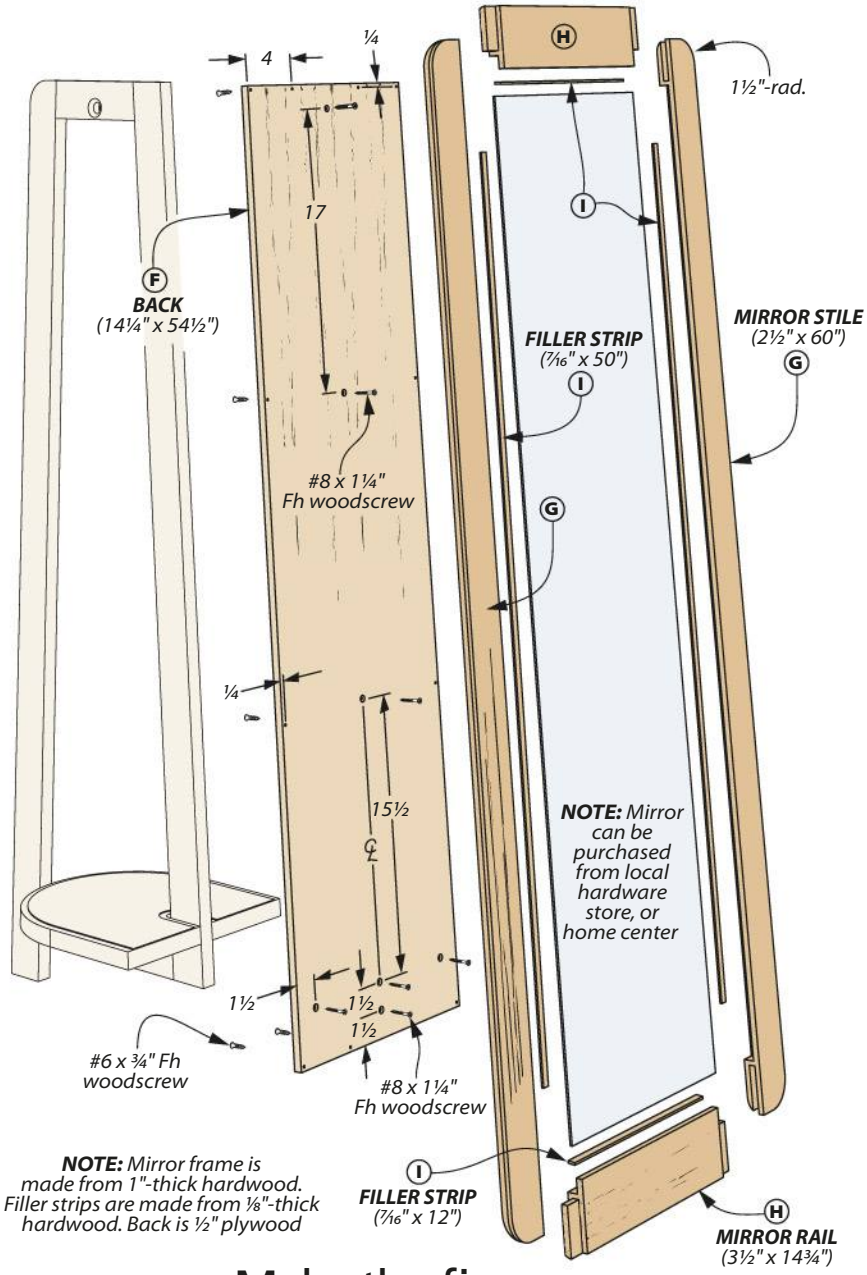

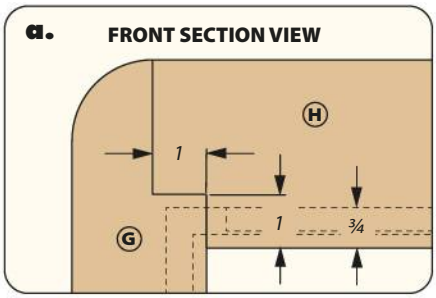

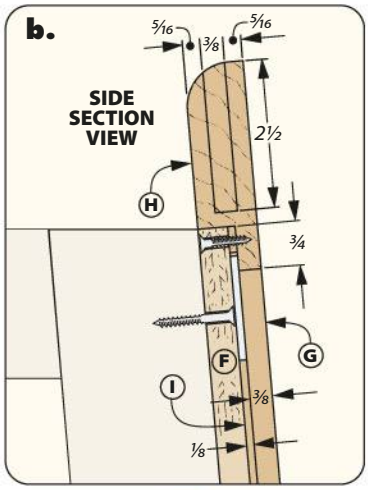

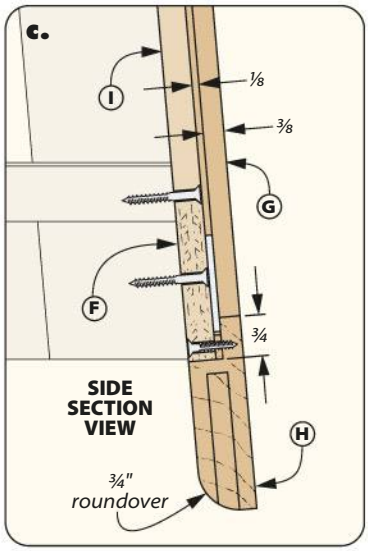

Make the fine MIRROR FRAME

The frame of the mirror is next up. As you see in the main drawing above, the joinery for the frame is an encore performance of mortise and tenon. This technique is ideal for strengthening the corner joints of this long frame that holds the mirror.

START WITH THE BACK. Backing up the frame is the plywood panel — it acts as a liaison between the mirror frame and the back assembly. Once you've cut it to size you'll spend a little time laying out the hole locations for the screws. Some attach the back to the front stile and tray, and some attach to the rabbet you'll make in the mirror frame. The main drawing along with details 'b' and 'c' show you how it's done. When you've finished drilling holes and countersinks, attach the plywood to the back assembly as you see in Figure 1 on the next page. Now you can turn your attention to making the mirror frame.

MIRROR FRAME

The first order of business is to cut the four pieces that make up the frame to their final size. Then we'll tackle the mortises on the stiles. All three of the details above reveal different information about the mortises. You'll make them at the drill press in the same manner as the rails for

ASSEMBLING THE MIRROR

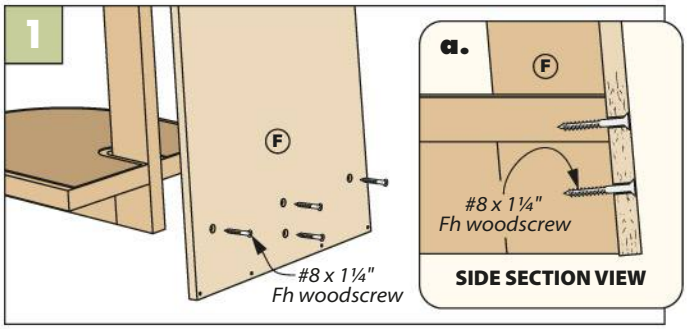

Attach the Back. The plywood back of the mirror frame is screwed to the front stile and tray of the back assembly.

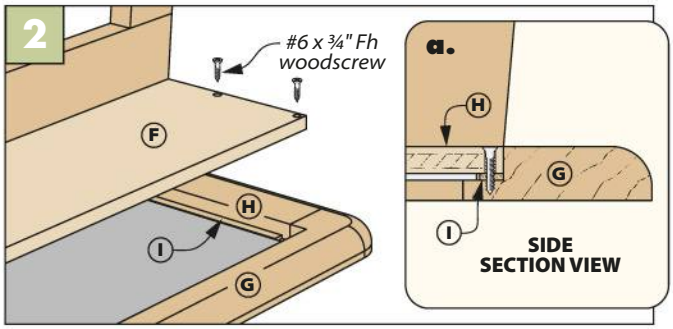

Attach the Frame. The filler strips protect and position the mirror in the frame. Countersunk screws hold it all together.

the back assembly — then clean them up and square the corners with a chisel at the bench.

TENONS. The tenons on the rails are next. Detail 'a' on the previous page shows the front profile. Detail 'b' shows its thickness and that it's centered on the workpiece. All this is fashioned at the table saw. As the blade slows to a stop after the last cut, it's time to glue up the frame.

GLUE UP. You can check the frame for square when the clamps are in place. But I'm fairly confident that the joinery will hold the frame square.

Details 'a' and 'c' on the previous page show the dimensions of the rabbet you need to rout on the back side of the frame. Then square up the corners. Detail 'a' also shows the round profile that's on the corners of the frame. A jig saw roughs out the waste and your favorite sanding regimen smooths out the remaining rough spots.

Detail 'b' shows the large roundover on the back edge of the frame. Multiple passes with a roundover bit in your hand-held router will do the trick.

FILLER STRIPS. Figure 2 and its detail show the placement of the filler strips. They're the same thickness as the mirror and act as a spacer for the mirror. Drill pilot holes in the frame before screwing the two together.

After the mirror is moved to its new home, try not to bury it under the clothes you don't want to hang up. You can save that duty for your treadmill. W

Materials, Supplies & Cutting Diagram

A	Back Stile (1)	1 x 2½ - 56¾	**F**	Back (1)	½ ply. - 14¼ x 54½	•	(1) 12½" x 13" 8 oz. Leather
B	Front Stile (1)	1 x 2½ - 54¼	**G**	Mirror Stiles (2)	1 x 2½ - 60	•	(9) #8 x 1¼" Fh Woodscrews
C	Top Rail (1)	1 x 2½ - 9¼	**H**	Mirror Rails (2)	1 x 3½ - 14¾	•	(12) #6 x ¾" Fh Woodscrews
D	Bottom Rail (1)	1 x 2½ - 13 13/16	**I**	Filler Strips (1)	1/8 x 7/16 - 125 rgh.	•	(1) 1/8" x 13¼" - 53½" Mirror
E	Slipper Tray (1)	1 x 13½ - 13½					

1"x 5½" - 72" White Oak (3.4 Bd. Ft.)

1"x 5" - 72" White Oak (3.1 Bd. Ft.)

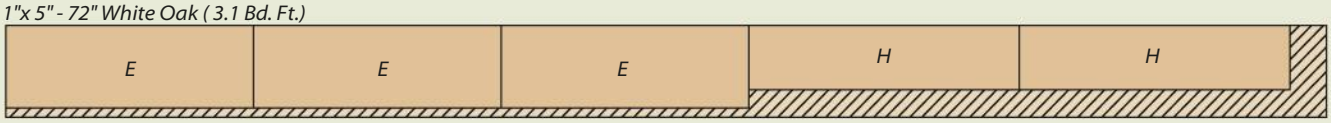

1"x 7" - 66" White Oak (4.0 Bd. Ft.)

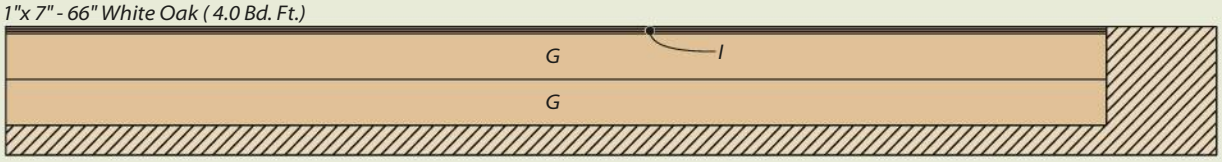

ALSO NEEDED: *One 24"x 96" Sheet of ½" Oak Plywood*

Written by: Phil Huber, Project Design; Chris Fitch

Illustrator: Bob Zimmerman

Mantel Clocks

This trio of timepieces puts bold design and special materials on display.

In the age of the smartphone, a clock feels like a throwback. Yet, at the risk of hyperbole, everybody loves a clock. A clock is like a wristwatch — functional jewelry for a room. The recipients of the clocks I've made love the handcrafted touch. Students in clock-making classes enjoy the building process. Part of the appeal is that a clock allows you to focus on small details without feeling overwhelmed.

Creative Director Chris Fitch offers a cautionary tale of the allure of these small projects. Tasked with coming up with one design ... he ended up with three. In addition to the delight of making, Chris had several concepts in mind for these. First, he wanted a unique look for each one. The Art Deco and Mid-Century designs recall historic styles that still play well with our time. The round clock plays with geometric shapes.

The second idea is that Chris wanted to show off some special wood: curly maple, curly oak, and walnut veneer. These materials catch your eye without distracting from the purpose of the clock.

The final aim is to keep each project simple in scope. Each clock focuses on a small number of construction details. This keeps your attention in the shop.

Any of these would look great on a mantel, bookcase, or desk. I mentioned earlier that these are ideal gift projects. If that's the case, you can set up your tools toward small batch productions and easily win the next few birthday, graduation, and Christmas cycles.

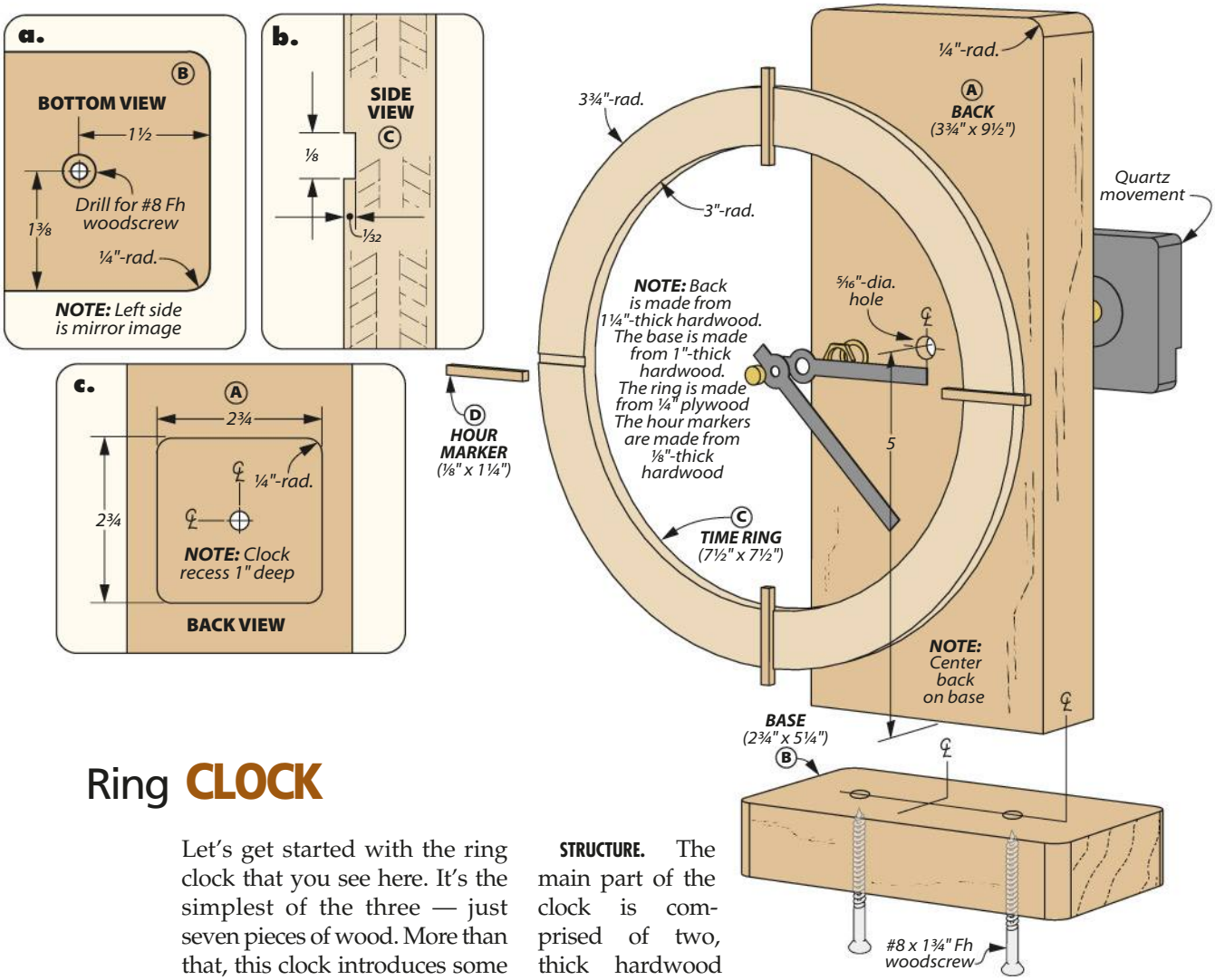

Ring **CLOCK**

Let's get started with the ring clock that you see here. It's the simplest of the three — just seven pieces of wood. More than that, this clock introduces some concepts and techniques that are used in the later projects.

▲ A bold time ring and figured hardwood present a minimal appearance that still catches your eye.

STRUCTURE. The main part of the clock is comprised of two, thick hardwood pieces: the back and the base. In the drawing above, take note of the size of each part as well as the corner radii.

In our version, we used some curly oak for these parts. The curl adds sparkle to the dramatic grain pattern. This figuring is especially apparent on the edges of the pieces.

Zero in on the back for a moment. There's a hole that allows the movement shaft to pass through, as in detail 'c.' On the back side, the movement rests in a pocket to make it as inconspicuous as possible (detail 'c'). I left the pocket open for easy access to adjust the time and change the battery. The drawings on the top of the next page show one way to make the pocket using a handheld router and a pattern bit.

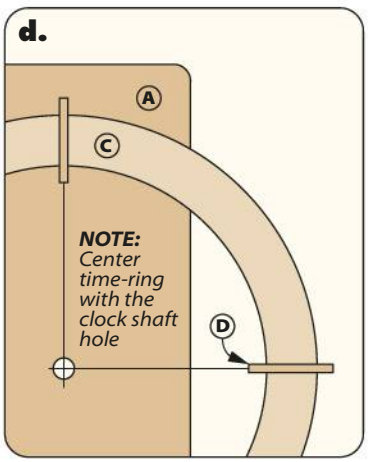

TEMPLATE DETAILS. You need to make a template with an opening that's large enough

to accommodate the movement. This is shown in detail 'c.' I made the template from ½" MDF. The reason for this is that with a bearing-on-top pattern bit, you need to allow for clearance so that the initial cut isn't too heavy. Using a bit with a relatively short cutting length helps too.

Like most routing tasks, you'll make the recess in a series of passes that step down in depth incrementally. I trace the perimeter of the template, then make sweeping passes across the opening to clear away the waste.

Lower the bit and repeat this process until you reach final depth. Depending on the cutting length of your bit, you may need to remove the template and use the edge of the recess as a guide for the bit's bearing.

ATTACH THE BASE. The base and back are joined with long woodscrews. I did add some glue here as well. The back is centered on the base. Drill shank holes in the base so you can mark locations to drill pilot holes in the back. These holes are necessary to avoid splitting as the screws are driven into place.

ROUTING THE CLOCK RECESS

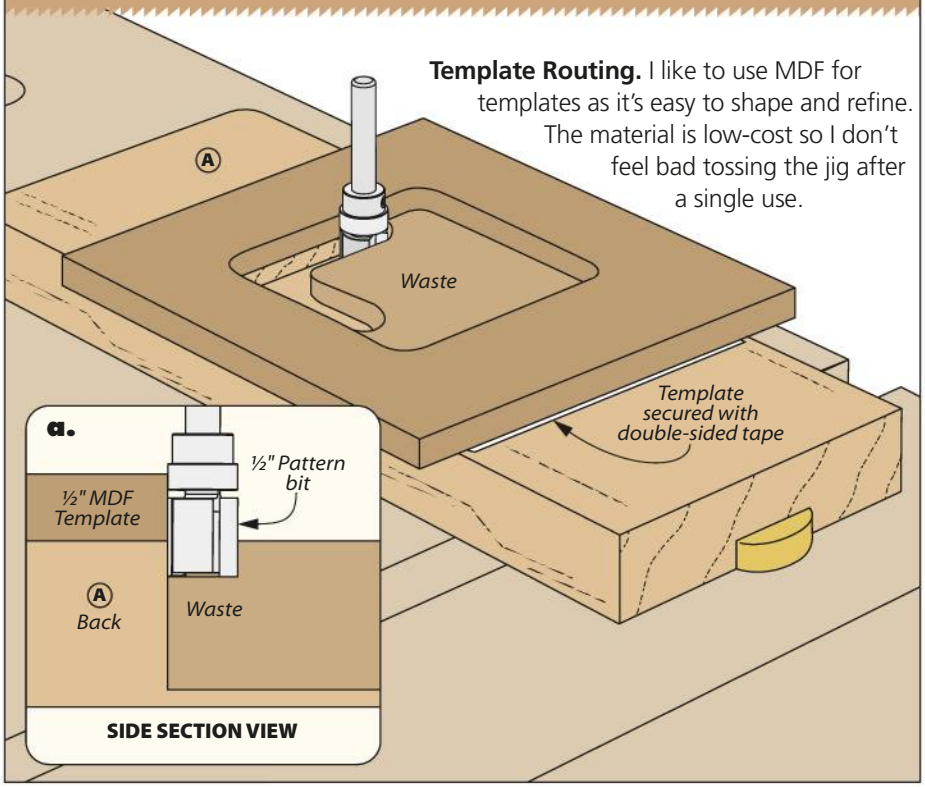

Template Routing. I like to use MDF for templates as it's easy to shape and refine. The material is low-cost so I don't feel bad tossing the jig after a single use.

FACE RING

The money maker of the clock is a brightly colored ring. The primary numbers 12, 3, 6, and 9 are indicated by thin markers.

The ring is made from thin plywood. The markers rest in shallow dadoes cut across the ring. This is shown in detail 'b' on the previous page. It's easier to form these in a square blank, so I began cutting them at the router table with a straight bit.

MAKE IT ROUND. There are several methods of making the ring round: a circle cutter in a drill press, router circle jig, or even just cutting it out with a scroll saw and filing and sanding to the lines. *Woodsmith.com* has a number of jigs and tips, if you're looking for some ideas.

You'll need something more than just sanding for the edges of the ring. The exposed plys stand out under paint. I rubbed in a thin coat of latex-based wood filler on the edges. Once it dries, this creates a uniformly smooth surface after sanding. Along the same lines, I sprayed paint on both sides of the time ring to avoid brush marks.

The number markers are cut to size and attached with instant glue. Then the ring is glued to the back, centered over the movement shaft opening, as shown in detail 'd' above. The final step is to install the movement. It's held in place with a washer and nut on the shaft.

▲ A quartz movement tucks into an opening on the back of the clock. Plain hands keep with the modern feel.

Materials, Supplies & Cutting Diagram

A Back (1)	1¼ x 3¾ - 9½	
B Base (1)	1 x 2¾ - 5¼	
C Ring (1)	¼ ply. - 7½ x 7½	
D Hour Markers (4)	⅛ x ⅛ - 1¼	

- (2) #8 x 1¾" Fh Woodscrews
- (1) Quartz Clock Movement

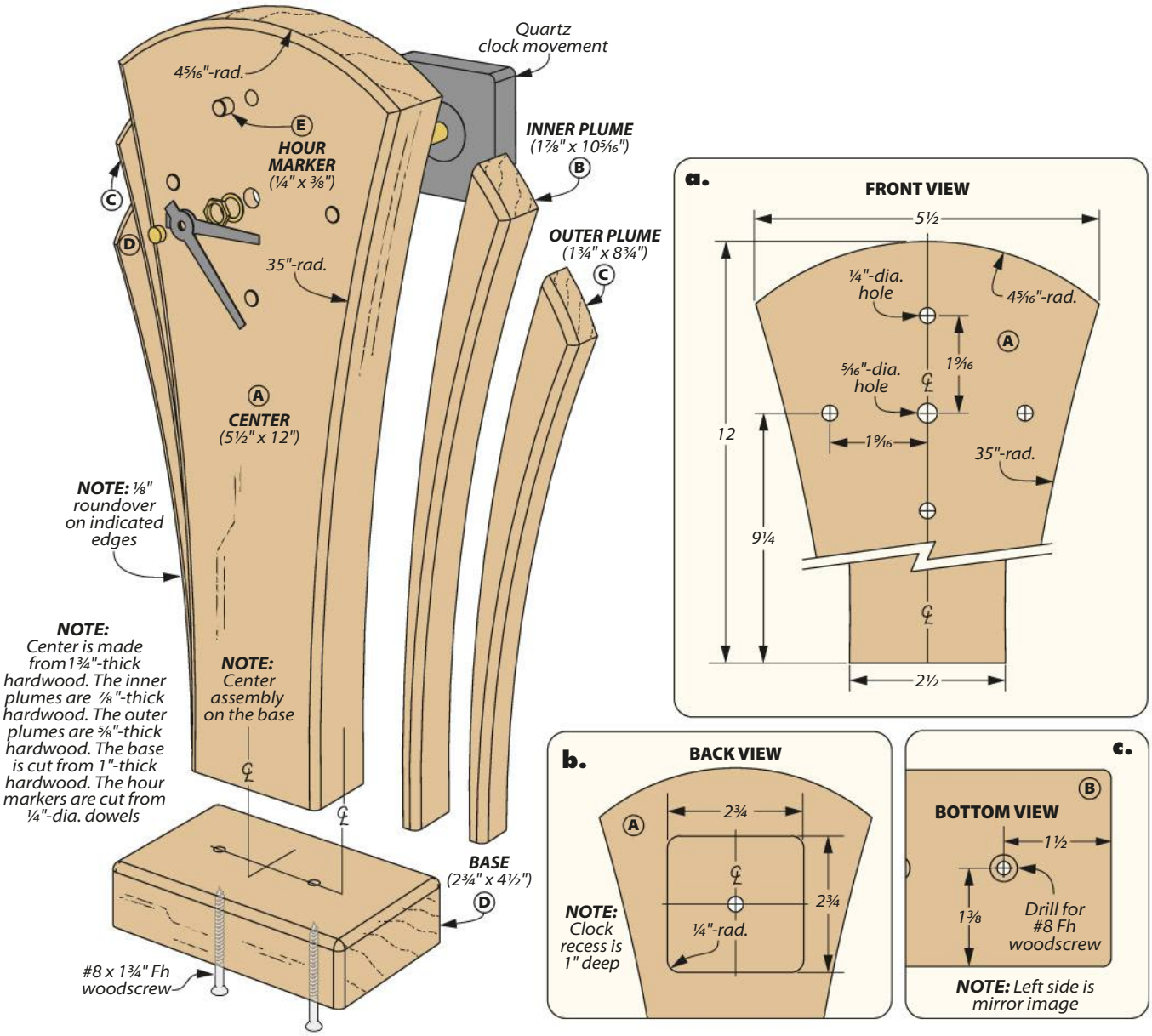

Art-Deco CLOCK

GO 2 Online Extras

For full-size clock patterns, go to:

Woodsmith.com/278

It doesn't take long to notice that the clock on this page shares a family resemblance with the first one. In the drawing above, notice the inner structure of an upright (here called the "center") and base are still present.

This also shows how easy it is to riff on the details to create a unique look. Chris' intention here is to call the Art-Deco fountain-plume motif to mind.

MATERIAL MATTERS. The primary material in this clock is curly maple. It's used in the base and the center. The side accent parts are from the curly oak from the previous clock.

In order to emphasize symmetry, I glued up the back from two parts. The shimmer in the figure seems to reflect off the centerline. Each of the side pieces steps back in thickness to add depth.

A WORD ABOUT SANDING. If you go with figured wood here, take note that tearout is real. After shaping each piece, I spent time with a freshly sharpened card scraper and sandpaper. Make the surfaces gleam before gluing the parts together — I sanded up to 400-grit.

PATTERN WORK. There are two ways to form the individual parts that make up the upper portion of the clock: You can lay out the arcs using the radii shown in details 'a,' 'd,' and 'e.'

The other way is to download and print the patterns from *Woodsmith.com/278*. Apply the patterns to card stock and trace the profiles onto the pieces.

INSIDE OUT. Work proceeds from the inside out. After gluing up the center, I drilled the hour marker holes, the shaft hole, and routed the recess for the movement using the dimensions in details 'a' and 'b.' A rectangular

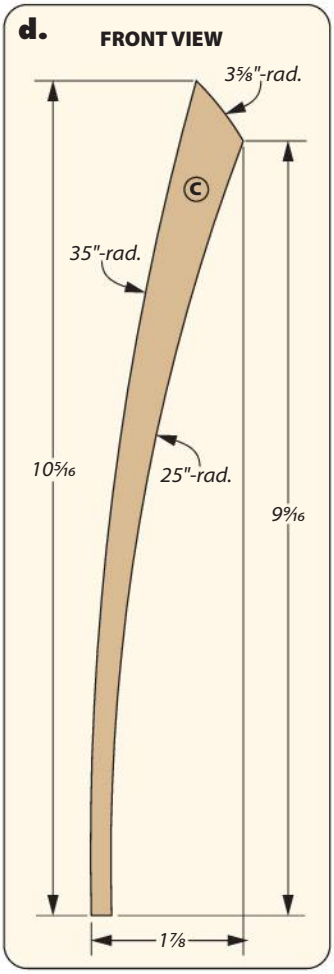

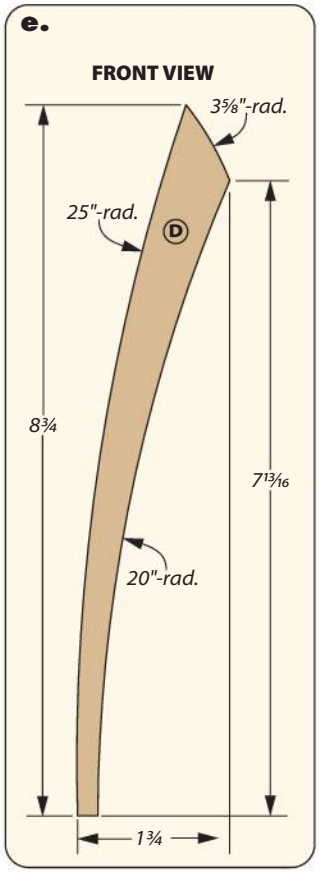

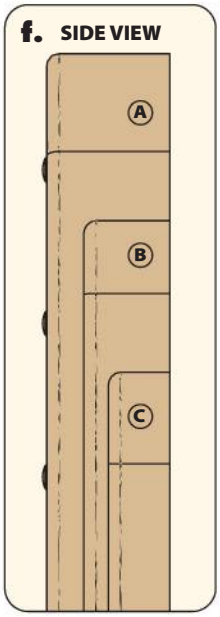

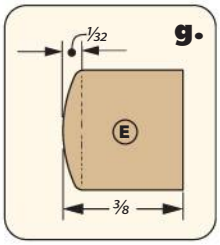

▲ Light-colored woods, and spray-like plumes enhance the streamlined look.

blank is easier to secure while tackling the routing.

Form the profile at the band saw. Keep in mind that the sides are glue surfaces, so take care to shape smooth, even curves. Here's how I do that.

Cut as close to the line as possible, staying just to the waste side. To clean up the blade marks and refine the curves, use an edge sander. A large-diameter spindle sander works best on the side curves. The work procedes in light passes right up to the lines. Run your fingers along the edge from time to time to gauge for any lumps or irregularities.

The front facing edges also get a routed roundover. Then we'll start on the next layers.

SIDE PLUMES

There are two side plumes along each side of the center piece. The parts are shown in details 'd' and 'e' above. These are made just like the center.

I worked on them one at a time. What's important is the fit between the center and the inner plumes. A strip of adhesive-backed sandpaper applied to the center lets you sand the mating edge on the plume into a complementary profile.

Smooth the upper curve and rout a roundover before gluing the plume in place. The plumes are set flush along the back faces, as shown in detail 'f.' Repeat this process to shape and attach the outer plumes.

THE BASE. The end of the assembled center and plumes needs to be smooth and flat to create a tight connection to the base. Scraping and some sanding should be all that's needed. The base is cut to size and the corners and edges are rounded. Detail 'c' on the previous page shows the location for the mounting holes. Drill matching pilot holes in the center prior to assembly.

Glue in small plugs for the hour markers. Then the movement can be installed.

Materials & Supplies

A	Center (1)	1¼ x 5½ - 12	**E**	Hour Markers (4)	¼ x ¼ - ⅜
B	Inner Plumes (2)	⅞ x 1⅞ - 10⁵⁄₁₆			
C	Outer Plumes (2)	⅝ x 1¾ - 8¾	•	(2) #8 x 1¾" Fh Woodscrews	
D	Base (1)	1 x 2¾ - 4½	•	(1) Quartz Clock Movement	

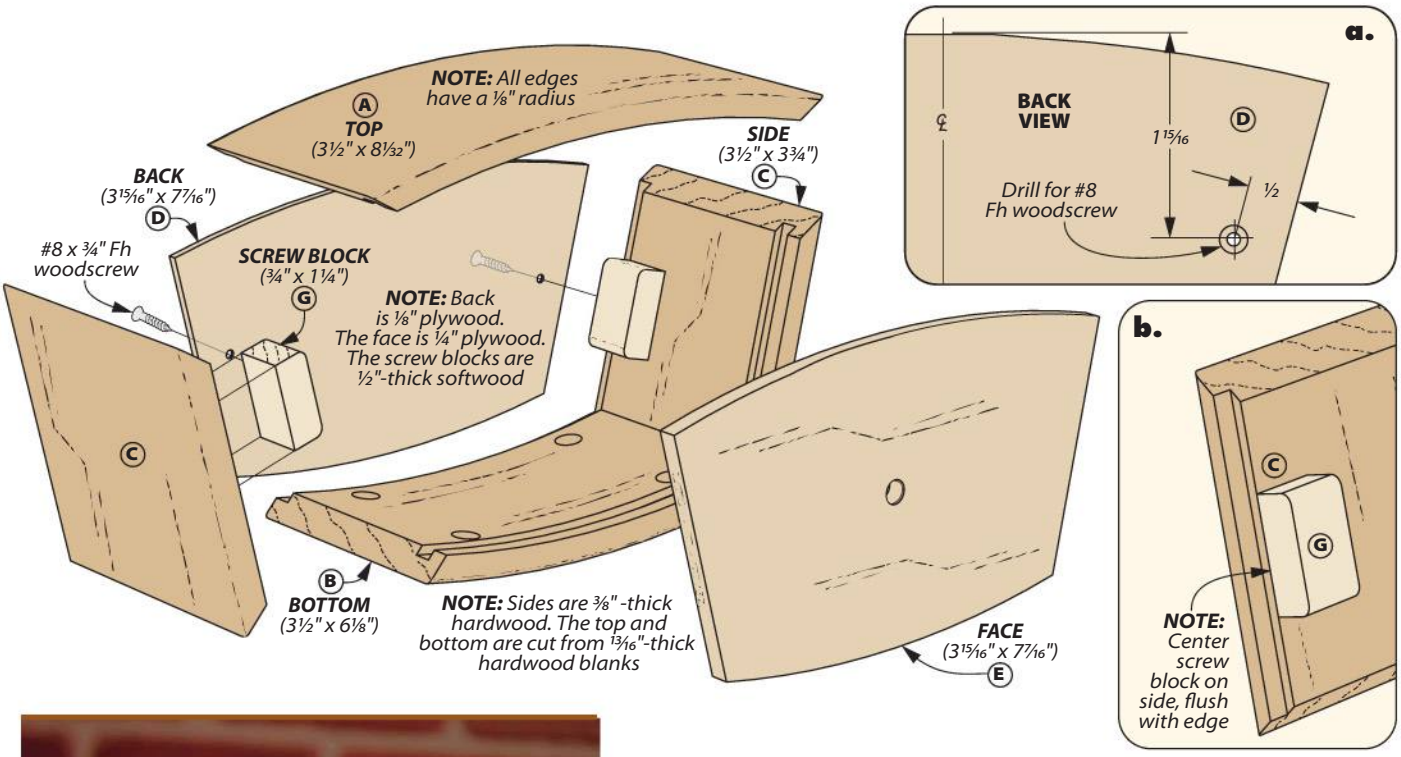

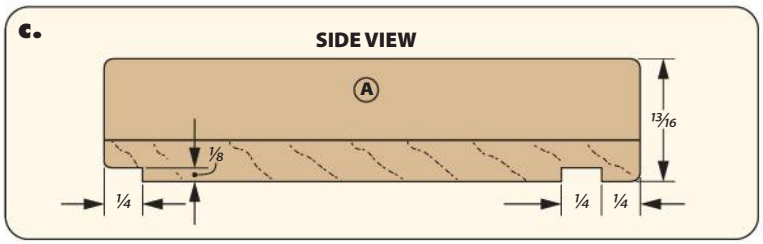

▲ Tapered, angled legs raise this clock up from the surface and give it a nostalgic, console-TV appearance.

Mid-Century CLOCK

Admittedly, this clock requires more work than the previous two. There are more parts, more miters, and more veneer. I believe the payoff is worth the effort.

CURVY CASE. A quick look at the mitered case in the drawing above could leave you second guessing. The curved top and bottom pieces seem ... problematic to miter. The reality reveals an easy solution to the puzzle. Don't miter curved parts. Instead miter square blanks, then make them curvy.

While the top and bottom look similar, the way you need to cut the miters differs between them. Since the angles are more acute on the top, the best approach to form them is with the piece held vertically. I used a shop-made tenoning jig. The process is illustrated in Figure 1 on the bottom of the next page.

In this orientation, you can tilt the saw blade to match the miter angle you need to cut, as shown in detail 'g.' The jig holds the part square to the blade and keeps your fingers safely back from the saw blade's teeth.

The angles on each end of the case bottom can be cut with the workpiece lying flat on the saw table. Again, tilt the blade to match the miters in detail 'h.'

NOW THE CURVES. I used a paper pattern to trace the curved profile on to the edges of the top and bottom. Holding the parts on edge, cut the curved shape at the band saw, as in Figure 2. Stay to the waste side of your lines. Then use a block plane, edge sander, sanding drums, and blocks to clean up the faces.

The two side pieces are the simplest to make. These are flat, however take note that the miter on each end is different, as you can see in detail 'd.'

The case pieces require a rabbet on the back edge to accept the case back, as in details 'c' and 'e.' They also need a groove for the face upfront. I cut these at the

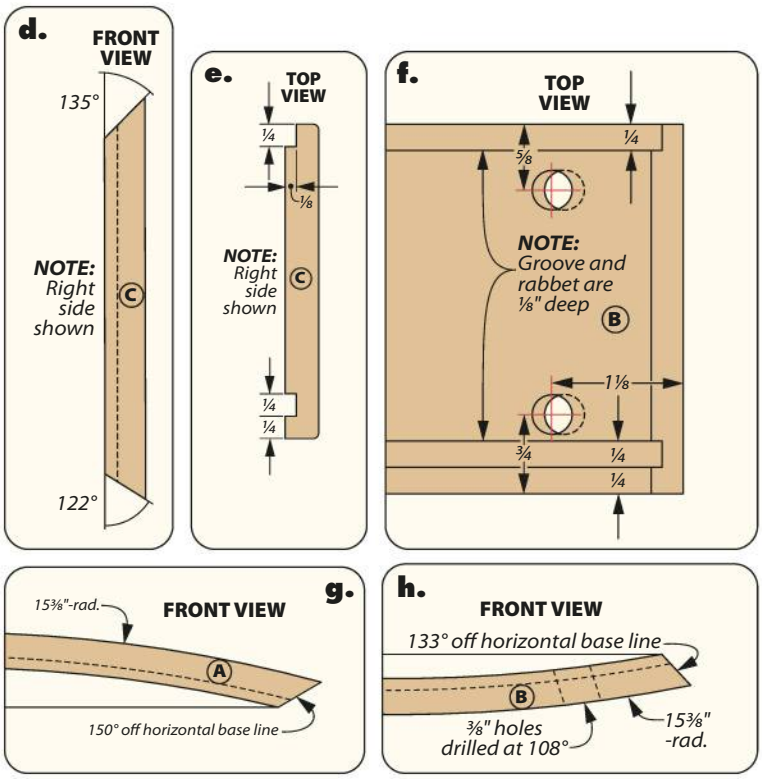

ANGLED LEG HOLES

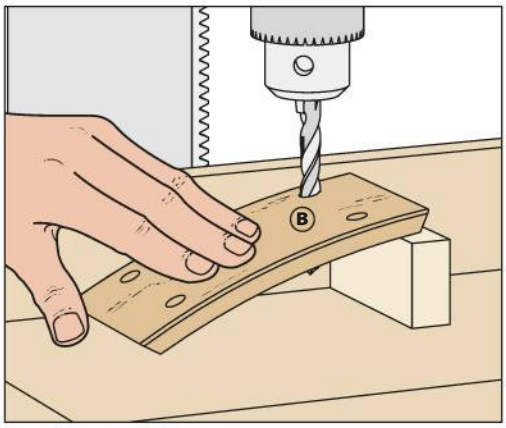

Angled Leg Holes. Prop the bottom on a small spacer to drill the angled holes for the legs at a consistent angle.

router table using a slot cutter bit. With the sides, you can use the router table fence. The curves on the top and bottom require you to make the cut freehand, as shown in Figure 3.

LEG HOLES, FACE & BACK. The upper right drawing shows the drill press setup I used to drill angled holes in the case bottom for the legs. Then use masking tape to assemble the case pieces without glue for the moment. This allows you to determine the shape of both the face and case back. I traced this shape onto blanks for each piece, then cut them to shape. Don't forget to take the depth of the rabbets and grooves into account.

GLUE UP. It's time to undo the tape and assemble the case. I applied glue to the miters and to the groove for the face. Masking tape once again is used to hold the pieces together. Roll the sides, top, and bottom around the face and pull the miters tight.

The back is removable in order to change battery and time. I added small glue blocks to the sides and drilled mounting holes (details 'a' and 'b').

GO 2 Online Extras

For full-size clock patterns, and a link to the tenon jig, go to: Woodsmith.com/278

MAKING THE TOP PIECE

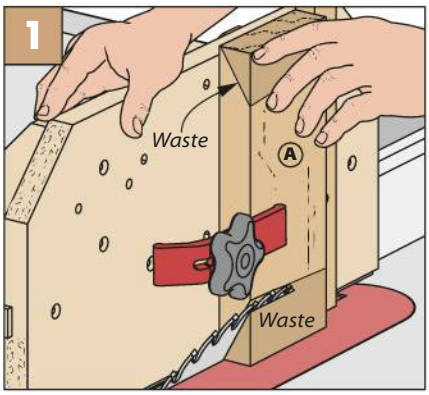

Tenon Jig. Clamp the top blank vertically to a tenon jig to cut the miter on each end.

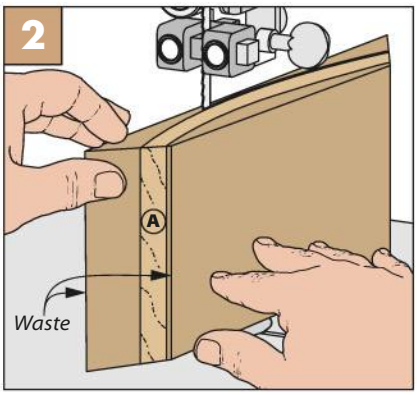

Trace & Cut. Lay out the profile on the edges and cut it to shape at the band saw. Sand the faces smooth.

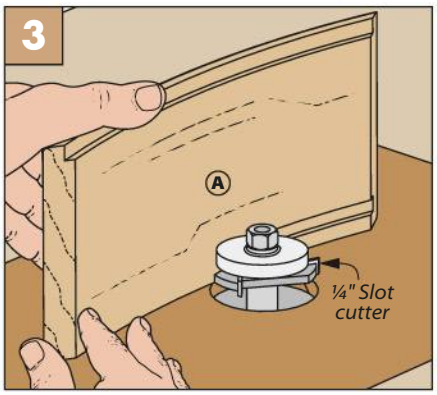

Groove & Rabbet. A slot cutter forms a rabbet on the back edge and a groove along the front edge of the top.

CLOCK FACE VENEER

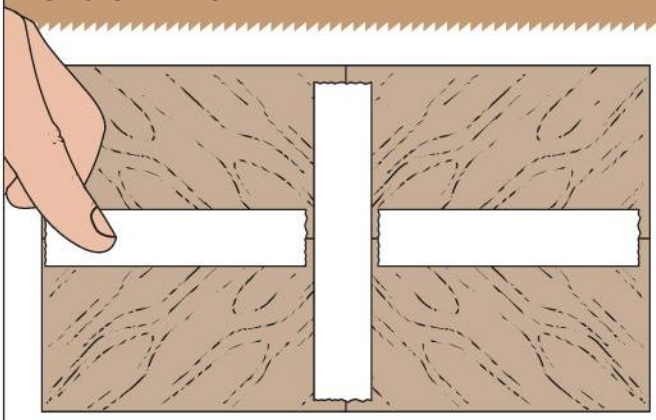

Diagonal Grain. Cut four pieces of veneer (2½" x 4") with the grain running 45° on the diagonal. Assemble the pieces with masking tape as shown.

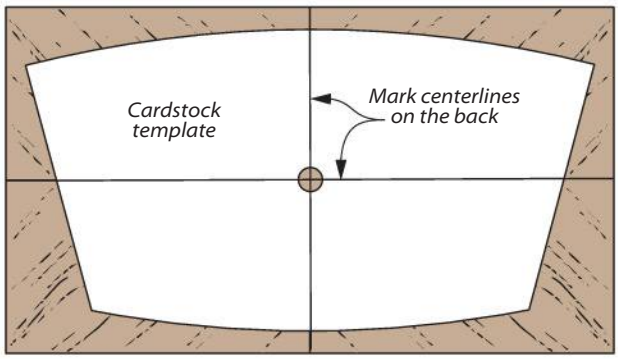

Size It Up. Flip the veneer tape-side down. Apply spray adhesive to a cardstock backer. Align the backer to the veneer seams and press it down. Then trim the veneer.

A pretty **FACE**

The process to build the mitered case takes the most time. However a couple more steps are necessary to wrap up the project. It starts with making an applied, decorative face for the clock. Then we'll finish with some custom tapered legs.

VENEER PATTERNS. Chris selected some striking walnut veneer for the clock face. Rather than cutting and fitting individual pieces of veneer into the case, we came up with a cleaner solution. The process is outlined in the box above. Begin by cutting a piece of cardstock to fit the opening at the front of the case. Mark a pair of centerlines on the cardstock. Use the template below as a guide.

Step two is to cut four pieces of veneer with the grain running diagonally across the rectangles. Lay these out to create a radial, sunburst pattern, as illustrated in Figure 1. Hold the seams together by stretching a piece of masking tape across each of the joint lines.

A good spritz of spray adhesive glues the cardstock to the veneer pattern. Take care to align the marks on the backer with the seams on the veneer. Press down the backer and roll it out for a secure bond.

TRIM & INSTALL. I find that the kind of fabric cutters that resemble pizza cutters work great on veneer. Use one of these or a razor knife with a fresh blade to trim the veneer flush with the cardstock backer.

At this point, you can peel back the tape from the front face. Any residue from the tape can be removed with some mineral spirits. Then gently sand the veneer with a random orbit sander and a fine disc.

The pattern at left comes in handy one more time. Use it to transfer the locations for the hour markers onto the veneer.

Don't attach the markers until you install the veneer into the case. Another spritz of spray adhesive is called for. You can't get a roller into the small case to press down the veneer. Instead, I used a small piece of MDF with a rounded edge. After pressing the veneer down, drill out the hole for the clock movement.

FACE AND BACK TEMPLATE
Print at 200%

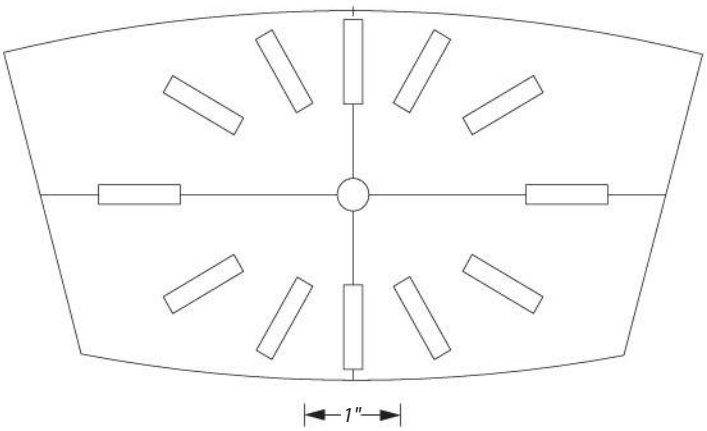

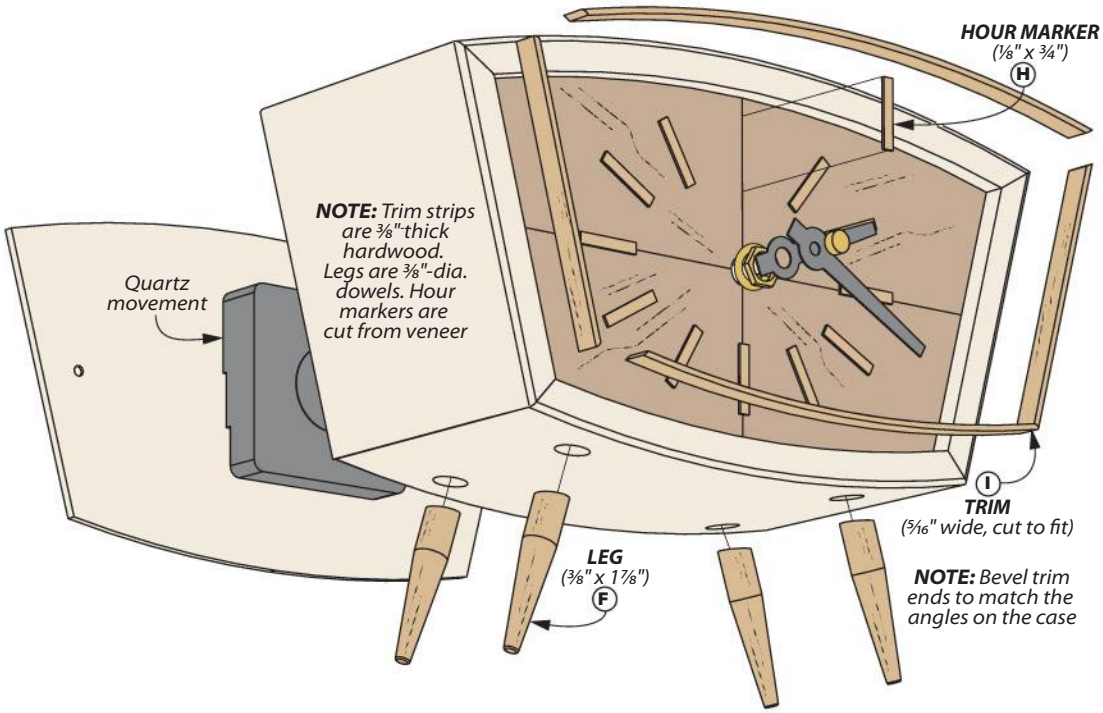

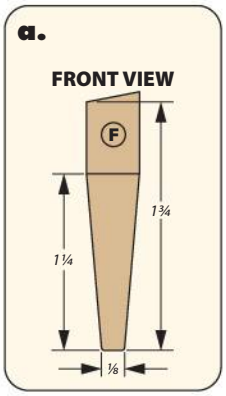

HOUR MARKERS. Let's wrap up the front of the clock. Cut the hour markers from thin strips of veneer. I used maple to provide a good contrast with the walnut clock face. A drop or two of instant glue is all that's necessary to hold them in place.

TRIM STRIPS. The final pieces to add are some trim strips around the inside edge of the front, as shown in the drawing above. The nice thing about these pieces is that they're so thin. You can simply glue them in place and they will conform to the curves of the top and bottom.

Each end of the trim is mitered to match the joint lines on the case. I did this by holding on the trim pieces in position and marking the angle with a pencil. The miter can be cut with a sharp knife or chisel. Mark and miter each piece before gluing any of them in place. Instant glue or a quick setting wood glue, like Titebond's *SpeedSet*, works for these small parts. Your fingers stand in for clamps.

TAPERED LEGS. You can purchase round tapered furniture legs online or in home centers, but not legs this small. Your best bet is to make them. It's fun.

The box at left shows you how to make them with a cordless drill and a disc sander. Mark the extent of the taper with a pencil. Just don't get carried away. You can quickly run out of dowel.

After gluing the legs into the case, it's time for finish. I applied a coat of oil to bring out the colors in the walnut and cherry. Then a coat of spray lacquer or shellac adds the shine. W

TAPERING THE LEGS

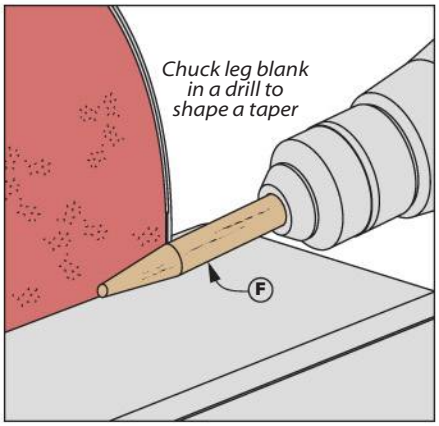

Taper the Legs. Spin a length of dowel against a disc sander to quickly shape smooth tapers on leg blanks.

Materials & Supplies

A	Top (1)	13⁄16 rgh. x 3½ - 8 1⁄32	**G**	Markers (12)	veneer - ⅛ x ¾
B	Bottom (1)	13⁄16 rgh. x 3½ - 6⅛	**H**	Trim Strips (4)	1⁄16 x 5⁄16 - 21rgh.
C	Sides (2)	⅜ x 3½ - 3¾	**I**	Legs (4)	⅜ x ⅜ - 1⅞
D	Back (1)	⅛ ply. x 3 15⁄16 - 7 7⁄16	•	(2) #6 x ¾" Fh Woodscrews	
E	Face (1)	¼ ply. x 3 15⁄16 - 7 7⁄16	•	(1) Quartz Clock Movement	
F	Screw Blocks (2)	½ x ¾ - 1¼	•	(1) 12" x 12" Walnut Veneer	

Breadboard Ends Considered

Large glued-up panels draw attention. We woodworkers fuss over the details: arranging the boards for a pleasing appearance, achieving tight gluelines, planing and sanding the panel for a smooth-to-the-touch surface.

Another critical aim is making sure the panel is (and stays) flat. Embedded stress in the wood along with seasonal expansion and contraction conspire to thwart that goal. One of the tools at our disposal to maintain flatness is to add breadboard ends. These strips of wood are attached across the grain of the panel. The rigidity of the pieces is meant to constrain a panel from warping.

▲ Large bolts (or lag screws) supported by washers provide one option to attach a breadboard end to a panel like this bench or a workbench.

Breadboard ends perform a decorative role as well as a functional one. The strips conceal the end grain and the change in direction of the ends acts like punctuation for the panel. By varying the width and detailing, the breadboard end can look utilitarian or ornamental. Most of the time, a breadboard end isn't strictly necessary. Including the detail in a project falls along a spectrum that balances its decorative and practical roles.

When you decide to include breadboard ends, the method of attaching them to the panel needs to be considered. Since this is a cross-grain connection, a plain glue joint or a handful of screws or nails isn't going to cut it. Seasonal wood movement will lead to early joint failure or to cracks in the panel. Instead what you need is an interlocking joint that combines strategically placed glue and some fasteners. Let's look at a few of the options.

TONGUE & GROOVE. For small panels like a cutting board (a.k.a. breadboard), a tongue and groove joint is often all that's necessary to integrate the end with the panel. You can see this in Figure 1 on the top of the next page.

This method is the simplest to make. The longer the tenon, the stronger the joint. However, there's a risk. Removing a lot of material from the breadboard end can release stresses that cause the walls of the breadboard end to spring open after a while, as show in Figure 1a.

Written by: Phil Huber

CLOSED MORTISE. Solving this is accomplished by stopping the groove short of the ends. This is shown in Figure 2. The material at the each end of groove provides support to keep the sides from opening out.

In effect, you go from a tongue and groove joint to a wide mortise and tenon. The process to make a long mortise is more involved compared to a groove. Yes, the tenon gets cut narrower too, but that step is straightforward.

ROOM TO GROW. The trick is to create a secure connection and allow the panel to move in response to changes in humidity. Rather than a snug fit between the sides of the tenon and the ends of the mortise, you need to cut the mortise so that it's a little longer than the width of the tenon. The size of the gap depends on the width of the panel. In a small cutting board, ⅛" is all you need. A large dining table on the other hand calls for gaps up to ½".

PINNING THE JOINT. An extra-large mortise provides the room for expansion. We now need to secure the breadboard end in such a way that gives the panel the freedom to expand as well. That's where the fasteners come into the picture.

Instead of just gluing the cap onto the panel, it's also pinned with dowels, as in Figure 2. This is similar to a pinned mortise and tenon joint. You drill a hole through both pieces and then drive in a short length of dowel. The difference with a breadboard end is that you need to elongate the outer holes in the tenon before driving in the dowels. This allows the panel to expand out in both directions, while the center pin anchors the end cap to the panel.

I still apply glue to the joint — just not the entire surface. The glue works to center the panel. So I glue the middle 6"-8" of the tenon. This strengthens the joint while still allowing the edges to move in and out.

LARGE PANELS. A single, wide tenon on large glued-up tops requires the removal of a lot of material from the breadboard end. This can lead to the end splitting if it's levered against (lifting the table, for example). The solution is to break up the tenon into a wide, short stub tenon interspersed with longer tenons.

Figure 3 shows an example of this. The breadboard end requires two steps. The long groove (mortise) we've already discussed. The other step is to make deeper mortises that align with the tenons. Like before, these mortises should be slightly wider than the tenons.

Each tenon gets a dowel to pin it in place. Once again, the holes in the outer tenons should be elongated. I usually glue the center tenon as well (belt and suspenders).

A FINAL OPTION. Dowels aren't the only way to attach a breadboard end. Long woodscrews, lag screws, or bolts can be driven in from the end. The lower photo on the previous page shows this. Elongated shank holes allow the panel to expand and contract. W

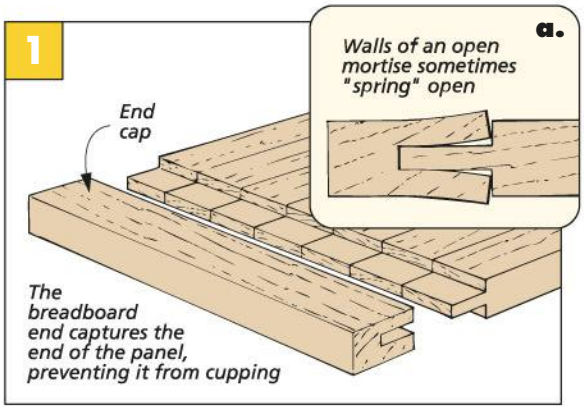

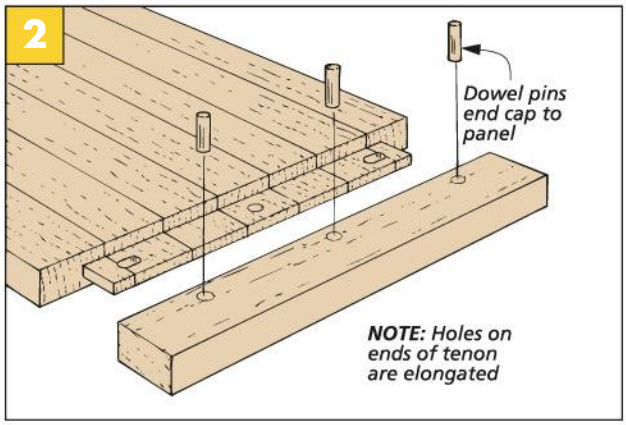

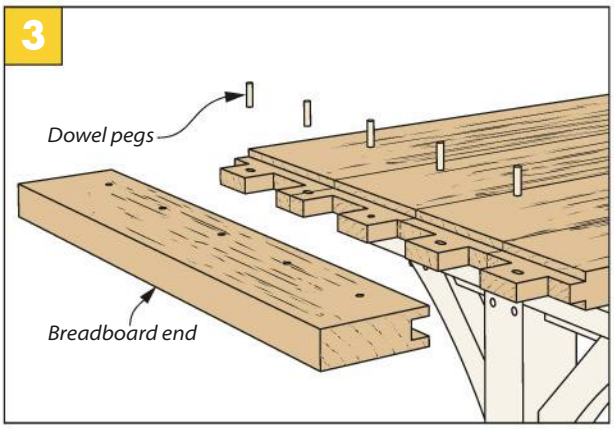

YES, IT'S SUPPOSED TO LOOK LIKE THAT

Like a broken clock that's right twice a day, a breadboard end and the tabletop may rarely be flush. Do not be alarmed. The panel is meant to expand and contract seasonally across its width. The length of the breadboard end doesn't change. In addition to what's shown here, there may be times when the panel is wider than the breadboard end.

Illustrations: Bob Zimmerman

Sources

Most of the materials and supplies you'll need to build the projects are available at hardware stores or home centers. For specific products or hard-to-find items, take a look at the sources listed here. You'll find each part number listed by the company name. See the left margin for contact information.

MAIL ORDER SOURCES

Project supplies may be ordered from the following companies:

Woodsmith Store
800-444-7527
store.woodsmith.com

Bennington Manufacturing
724-813-7812
retractablecaster.com

General Finishes
800-783-6050
generalfinishes.com

Klockit
klockit.com

Lee Valley
800-871-8158
leevalley.com

Lowe's
lowes.com

MicroJig
855-747-7233
microjig.com

McMaster-Carr
630-833-0300
mcmaster.com

Old Masters
800-747-3436
myoldmasters.com

Varathane
Varathanemasters.com

GREAT GEAR *(p.22)*

Gator's "Reptilion" and "Powernet" sanding supplies can be found at a number of retailers, but the most widely available supplier is *Lowe's*. If you're interested in *Bennington Manufacturing*'s R7 casters (or their slightly larger R8 versions), visit their website or call the number in the left margin.

- **MicroJig**
  Grr-Rip Clamp . . DVC-625QCK2
  Grr-Ripper . . . . . GR-100+

THE AUTOMATON *(p.28)*

Chris finished the gear box with *General Finishes* "Butcher Block Oil" because "It looks nice but doesn't dry hard — which would foul the workings."Also,when it came to the knob he suggested, "The knob is builder choice from the leftovers bin." He's got a good idea there, my bin is right next to my old coffee can of handy hardware bits.

- **McMaster-Carr**
  ⅛" Brass Pin. 8859K53
  Screw Eye 9497T57
  2" Ex.Spring 5108N205
  ½" Nylon Spacer . . 94639A514

TRESTLE TABLE *(p.34)*

The red oak of the trestle table was stained with *Varathane* "Gunstock" stain. To add depth, luster, and plenty of protection, the table and benches were sprayed with a couple of coats of lacquer.

SAW SLED DUO *(p.42)*

Although I've provided the commercial miter bars I used below, any commercial miter bar (or even plain steel bar stock or hardwood) will work fine, as long as they're fit to the dimensions of you miter slots.

- **Lee Valley**
  3' x ¼" T-Track 12K7924
  5/16"-18 x 2½" T-Bolts . . 12K7965
  5/16"-18 Star Knobs 00M7001
  T-Track Hold Downs . . 13K1012
  25½" Miter Bar. 86N7045
  18" Miter Bar 86N7040

FLOOR MIRROR *(p.48)*

The white oak of the floor mirror was stained with *Old Masters* "Pine" gel stain. When the stain is dry, apply two coats of lacquer to finish the project. You'll find the mirror at a local glass shop, hardware store, or home center.

THREE CLOCKS *(p.54)*

Any time we design a clock project, *Klockit* is our first stop. There are endless variations on movements and hands. I've listed the hands based on the clocks they go with.

- **Klockit**
  Quartz Movement 10153
  Ring Clock Hands 67909
  Deco Clock Hands 66962
  Mid-Mod Hands. 66962

Rattle-can spray finishes are ideal for small projects like this. Lacquer, acrylic, water-based, and shellac are all worthy options. They dry fast and allow multiple coats in a day.

RAZOR-SHARP EDGES in 5 Minutes!

The *Woodsmith* Cabinet Scraper System offers a fool-proof method for getting a consistent, razor-sharp edge using only a few simple tools. The secret is in the *Woodsmith* jig—a unique tool that lets you file the edge and then create the bur.

Item# 7512124
Woodsmith Cabinet Scraper System $59.99

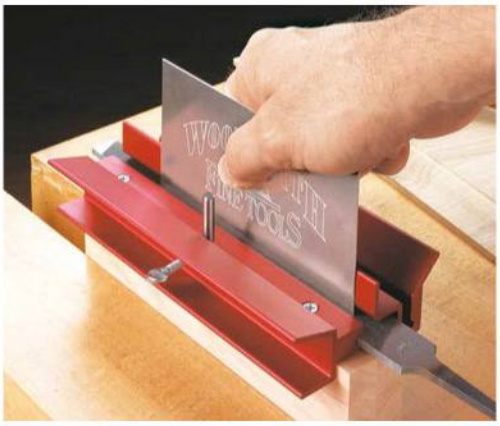

EXCELLENT ACCURACY & RELIABILITY

Quality machines with proven performance.

QUALITY TOOLS SHOP FOX® SINCE 1989

grizzly.com/shopfox

TWO YEAR WARRANTY

Available at these fine retailers:

grizzly.com JB TOOLS ACME TOOLS THE TOOL NUT

& MORE!
See website for details

OUR BOND IS OUR WORD

You're serious about your woodworking projects. So are we.

Titebond wood glues offer the proven performance, respected advice and trusted solutions you demand. We remain committed to being there with you for every project.

Titebond®

titebond.com | 1-800-347-4583

01105_5227TF